TENN.	YEAR	SHEET NO.
	2022	1
FED. AID PROJ. NO.		
STATE PROJ. NO.	39999-3609-04	

STATE OF TENNESSEE
DEPARTMENT OF TRANSPORTATION
BUREAU OF ENGINEERING

HENDERSON COUNTY

370 ROCK MILAM ROAD
CEDAR GROVE, TN 38321

CONSTRUCTION

Index Of Sheets
SEE SHEET NO. 1A

CURRENT MINIMUM STATE OF TENNESSEE ADOPTED CODES AND STANDARDS

(A) INTERNATIONAL BUILDING CODE, 2012 EDITION (EXCLUDING CHAPTER 11 AND SECTION 3411)
(B) NATIONAL ELECTRIC CODE, NFPA 70, 2017 EDITION.
(C) INTERATIONAL ENERGY CONSERVATION CODE, 2012 (See Sheet G02.01 for others)

OCCUPANCY: NON-SEPARATED MIXED OCCUPANCY

IBC 2012:	STORAGE OCCUPANCY, MODERATELY HAZARDNS-1 BUISNESS B	IBC SECTION 311 IBC SECTION 508.3
	EXCEPTION 1 - CURRENT OCCUPANT LOAD FOR MEZZANINE IS 3 *MEZZANINES OR PORTIONS THEREOF ARE NOT REQUIRED TO BE OPEN TO THE ROOM IN WHICH THE MEZZANINES ARE LOCATED, PROVIDED THAT THE OCCUPANT LOAD OF THE AGGREGATE AREA OF THE ENCLOSED SPACE IS OT GREATER THAN 10*	IBC SECTION 505.2.3
NFPA 2012:	STORAGE OCCUPANCY, ORDINARY HAZARD	NFPA CH.42

CONSTRUCTION TYPE:

IBC 2012:	TYPE VB - NON SPRINKLERED	IBC TABLE 601
NFPA 2012:	TYPE VB - NON SPRINKLERED	NFPA CH.42

1

FIRE STOPPING REQUIREMENT

Fire stopping methods and materials employed on the job site may not deviate from the approved systems detailed within this approved set.

This building has been reviewed for significant items of the standard(s) adopted in the Tennessee Public Building Accessibility Act. It has not been reviewed for compliance with the Americans with Disabilities Act.

OCCUPANT NOTIFICATION

Occupant notification shall be in accordance with IFC 907.2.7.1 and/or NFPA 101 9.6.3 with respect to type and number as required by applicable codes. The location of devices shall be installed per NFPA 72.

PROJECT NO. 39999-3609-04 CONSTRUCTION

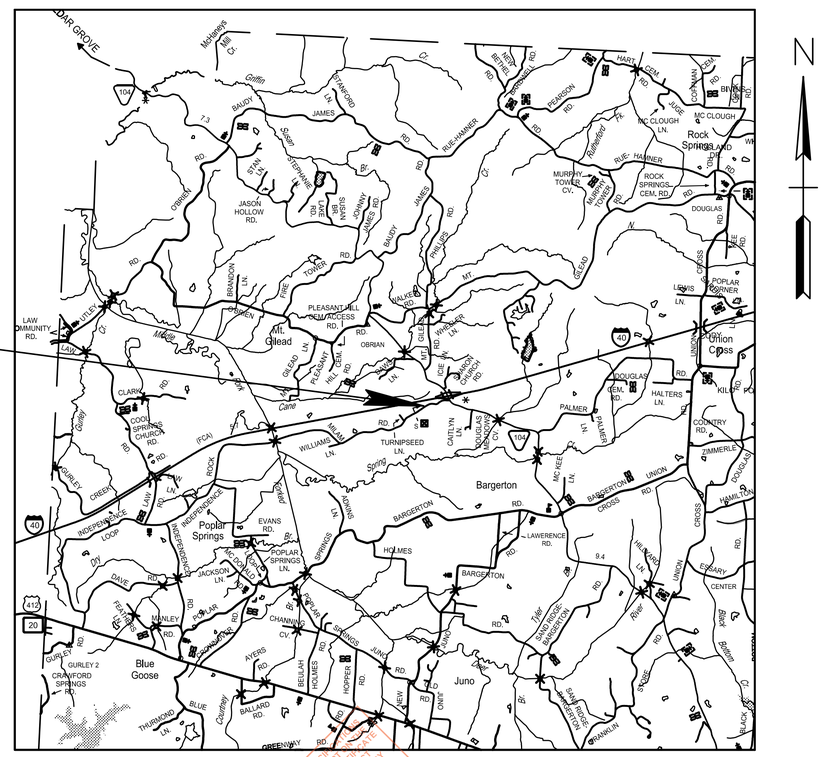

SCALE: 1"= 5280' 0 1 2 3 MILES

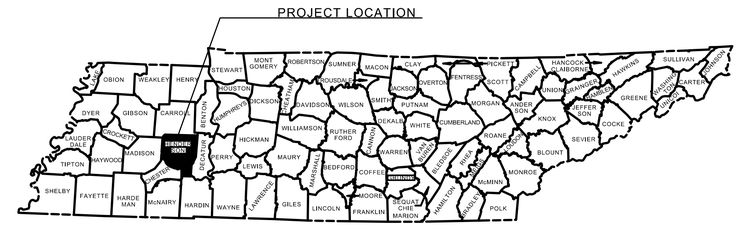

Joseph P. Schmitt
APPROVED for construction by Joseph P. Schmitt
2024.08.23
09:13:22 -05'00'

This document is not valid if a state fire marshal's seal and electronic signature or certification is not visible above.

SEALED BY
ANDREW JAMES MATHEWS
REGISTERED ENGINEER
No. 117886
STATE OF TENNESSEE
8/9/2024

APPROVED: Paul D. Degges
PAUL D. DEGGES, CHIEF ENGINEER

DATE:

APPROVED: Clay Bright
CLAY BRIGHT, COMMISSIONER

U.S. DEPARTMENT OF TRANSPORTATION
FEDERAL HIGHWAY ADMINISTRATION

APPROVED:

DIVISION ADMINISTRATOR DATE

SPECIAL NOTES

PROPOSALS MAY BE REJECTED BY THE COMMISSIONER IF ANY OF THE UNIT PRICES CONTAINED THEREIN ARE OBVIOUSLY UNBALANCED, EITHER EXCESSIVE OR BELOW THE REASONABLE COST ANALYSIS VALUE.

THIS PROJECT TO BE CONSTRUCTED UNDER THE STANDARD SPECIFICATIONS OF THE TENNESSEE DEPARTMENT OF TRANSPORTATION DATED JANUARY 1, 2015 AND ADDITIONAL SPECIFICATIONS AND SPECIAL PROVISIONS CONTAINED IN THE PLANS AND IN THE PROPOSAL CONTRACT.

TDOT C.E. MANAGER 1 OR
TDOT TRANSPORTATION MANAGER 1 : KEN HAMPTON

DESIGNED BY : SEE SHEET NO. 1A

DESIGNER : SEE SHEET NO. 1A CHECKED BY SEE SHEET NO. 1A

P.E. NO. 39999-3609-04 (DESIGN)

PIN NO. 131121.0

THESE PLANS AND SPECIFICATIONS ARE REQUIRED TO BE KEPT ON THE JOB SITE UNTIL A FINAL CERTIFICATE OF OCCUPANCY OR PROJECT COMPLETION FORM IS ISSUED BY THE OFFICE.
For alteration, deviation, addition or installation of devices not specifically approved by an official written permit from this office.
TENNESSEE STATE FIRE MARSHAL'S OFFICE

$$$$SYTIME$$$$$$
$$$$DGNSPEC$$$$$$
TFM# 21349 PROJECT# 2024-04-17-10
FIELD SET

SHEET INDEX

Sheet Name	SHEET NO.	Current Revision Date
_ COVER SHEET	1	8/7/24
1A SHEET INDEX AND QUANTITIES	2	8/7/24
G 02.01 GENERAL DATA	3	
C1.0 SITE PLAN	4	
C2.0 UTILITY PLAN	5	8/7/24
A 01.01 FIRST FLOOR - CORE AND SHELL	6	
A 01.03 FIRST FLR. / MEZZ. BUILD-OUT	7	
A 02.01 ROOF PLAN	8	
A 03.01 DOORS AND WINDOWS DTLS.	9	
A 04.01 BUILDING ELEVATIONS	10	
A 05.01 BUILDING SECTION	11	
A 08.01 MISC. DETAILS	12	
A 08.02 MISC. DETAILS	13	
S0.1 STRUCTURAL GENERAL NOTES	14	
S0.2 SPECIAL INSPECTION NOTES	15	
S1.0 FOUNDATION PLAN	16	
S1.1 MEZZANINE PLAN	17	
S5.1 SECTIONS AND DETAILS	18	
M0.1 MECHANICAL SPECIFICATIONS	19	
M0.2 MECHANICAL SPECIFICATIONS	20	
M1.0 MECHANICAL CORE & SHELL	21	
M1.1 MECHANICAL FIRST FLR./ MEZZ.BUILD-OUT	22	
P0.1 NOTES, LEGENDS & SCHEDULES	23	
P1.0 PLUMBING CORE & SHELL	24	
P1.1 PLUMBING FIRST FLR./ MEZZ.BUILD-OUT	25	
P2.0 PLUMBING DETAILS	26	
E0.1 ELECTRICAL LEGENDS	27	
E1.0 ELECTRICAL CORE AND SHELL	28	
E1.1 ELECTRICAL BUILD-OUT & MEZZANINE	29	
E6.1 ELECTRICAL SCHEDULES	30	
T0.1 TECHNOLOGY GEN NOTES & LEGENDS	31	
T1.1 TECH. FIRST FLR./MEZZ. BUILD-OUT	32	
T5.0 TECHNOLOGY DETAILS	33	
A 09.01 LIFE SAFETY PLANS	34	

ESTIMATED QUANTITIES

	ITEM NO.	DESCRIPTION	UNIT	QUANTITY
1	607-65.20	SITE PREPARATION	EACH	1
2	680-02.01	BUILDING (FOUNDATION AND STRUCTURE)	EACH	1
3	680-02.02	BUILDING (INTERIOR CONSTRUCTION)	EACH	1
	717-01	MOBILIZATION	LS	1

1. INCLUDING BUT NOT LIMITED TO REMOVAL OF EXISTING STRUCTURES, SITE WORK, AND SITE UTLITY WORK.
2. INCLUDING BUT NOT LIMITED TO INSTALLATION OF NEW FOUNDATIONS, FLOOR SLABS, PRE-ENGINEERED METAL BUILDING, MECHANICAL UNITS, AND OVERHEAD BAY LIGHTING (CORE AND SHELL)
3. INCLUDING BUT NOT LIMITED TO CONSTRUCTION OF INTERIOR FRAMING, PLUMBING, OFFICE LIGHTING, AND INTERIOR BUILD OUT OF ELECTRICAL WORK.

PROJECT DESIGNERS

ARCHITECT: WOLD/HFR DESIGN

RON FRANKS
214 CENTERVIEW DRIVE, STE 300
BRENTWOOD, TN 37207

CIVIL ENGINEER: SSR, INC.

BRANDON TAYLOR, PE
2650 THOUSAND OAKS BLVD, SUITE 4200
MEMPHIS, TN 38118

STRUCTURAL ENGINEER: SSR, INC.

AJ MATHEWS, PE
2995 SIDCO DRIVE
NASHVILLE, TN 37204

MECHANICAL ENGINEER: SSR, INC.

WALTER BLALACK, PE
2650 THOUSAND OAKS BLVD, SUITE 4200
MEMPHIS, TN 38118

PLUMBING ENGINEER: SSR, INC.

WALTER BLALACK, PE
2650 THOUSAND OAKS BLVD, SUITE 4200
MEMPHIS, TN 38118

ELECTRICAL ENGINEER: SSR, INC.

GREG LOBO, PE
2650 THOUSAND OAKS BLVD, SUITE 4200
MEMPHIS, TN 38118

TECHNOLOGY ENGINEER: SSR, INC.

PALMER BELL
2995 SIDCO DRIVE
NASHVILLE, TN 37204

LOCAL OFFICIALS

FIRE CHIEF

LYNN MURPHY
50 NATCHEZ TRACE DRIVE
LEXINGTON, TN 38351
(731) 968-4153

BUILDING OFFICIAL

DOUG BARTHOLOMEW
17 MONROE STREET
LEXINGTON, TN 38351
(731) 968-2941

THESE PLANS AND SPECIFICATIONS ARE REQUIRED TO BE KEPT ON THE JOB SITE UNTIL A FINAL CERTIFICATE OF OCCUPANCY OR PROJECT COMPLETION FORM IS ISSUED BY THIS OFFICE.

No alterations, deviations, additions or modifications of any kind are allowed in this approved set without written permission of this office.

TENNESSEE STATE FIRE MARSHAL'S OFFICE

PROJECT NO.	39999-3609-04
PIN NO.	131121.0

REVISIONS

DESCRIPTION	BY	DATE
SFM COMMENTS	MC	8/7/24

TDOT HENDERSON COUNTY MAINTENANCE BUILDING
370 ROCK MILAM ROAD
CEDAR GROVE, TN 38321

PHASE: CONSTRUCTION
DATE: AUGUST 18, 2023

Wold HFR DESIGN
214 Centerview Drive Suite 300
Brentwood, TN 37027
woldae.com phone: 615.370.8500
fax: 615.370.8530

SSR Smith Seckman Reid, Inc.
2650 Thousand Oaks Boulevard, Suite 4200
Memphis, TN 38118
(901) 683-3900
FAX: (901) 683-3990
www.ssr-inc.com

SEALED BY

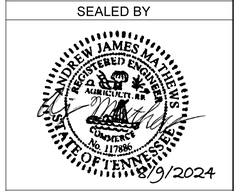

STATE OF TENNESSEE
DEPARTMENT OF TRANSPORTATION

SHEET INDEX AND QUANTITIES 1A

SHEET 2 OF 34

FIELD SET TFM# 21349 PROJECT# 2024-04-17-10

GENERAL ABBREVIATIONS

A.F.F.	ABOVE FINISHED FLOOR	MAX.	MAXIMUM
A.F.S.	AT FINISHED SLAB	MECH.	MECHANICAL
ADD'L	ADDITIONAL	MED.	MEDICAL
ADJ.	ADJUSTABLE	MED. CAB.	MEDICAL CABINET
ADMIN.	ADMINISTRATION	MFR.	MANUFACTURER
ALUM.	ALUMINUM	MGMT.	MANAGEMENT
APPROX.	APPROXIMATE	MH	MANHOLE
ASST.	ASSISTANT	MIN.	MINIMUM
B.W.	BOTTOM OF THE WALL	MIR.	MIRROR
B/B	BALLED & BURLAPPED	MISC.	MISCELLANEOUS
BR.	BARE ROOT	MR/S	MIRROR WITH SHELF
BRKT.	BRACKET	MTD.	MOUNTED
BRKTS.	BRACKETS	MTL.	METAL
C'SNK.	COUNTERSUNK	N.I.C.	NOT IN CONTRACT
C.B.	CATCH BASIN	NOM.	NOMINAL
C.F.C.I.	CONTRACTOR FURNISHED / CONTRACTOR INSTALLED	O.C.	ON CENTER
		O.D.	OVERFLOW DRAIN
C.J.	CONTROL JOINT	O.F.C.I	OWNER FURNISHED / CONTRACTOR INSTALLED
C.M.U.	CONCRETE MASONRY UNIT		
CAB.	CABINET	O.F.O.I.	OWNER FURNISHED / OWNER INSTALLED
CLG.	CEILING		
CLO.	CLOSET	OPER.	OPERATIONS
CNTR.	COUNTER	OPNG.	OPENING
COL.	COLUMN	OPP.	OPPOSITE
COMP.	COMPUTER	P.P.G.	POLISHED PLATE GLASS
CONC.	CONCRETE	P.R.V.	POWER ROOF VENTILATOR
CONF.	CONFERENCE	P.T.	PRESSURE TREATED
CONST.	CONSTRUCTION	PART'N(S)	PARTITION(S)
CONT.	CONTINUOUS	PLAS.	PLASTER
CORR.	CORRIDOR	PLAS. LAM.	PLASTIC LAMINATE
DIA.	DIAMETER	PLYWD.	PLYWOOD
DIAG.	DIAGONAL	PREP.	PREPARATION
DIM.	DIMENSION	PREV.	PREVENTIVE
DIR.	DIRECTOR	PROF.	PROFESSIONAL
DISP.	DISPENSER	PTD	PAPER TOWEL DISPENSER
DS	DOWNSPOUT	Q.T.	QUARRY TILE
DTL.	DETAIL	R.	RADIUS
DWGS.	DRAWINGS	R.D.	ROOF DRAIN
EA.	EACH	R.O.	ROUGH OPENING
ELEC.	ELECTRICAL	RECEPT.	RECEPTION
ELEV.	ELEVATION	RECOV.	RECOVERY
ENCL.	ENCLOSURE	REF.	REFRIGERATOR
EQUIP.	EQUIPMENT	REF.	REFER, REFERENCE
EXIST.	EXISTING	REINF.	REINFORCING, REINFORCED
EXP. JT.	EXPANSION JOINT	REQ'D	REQUIRED
EXT.	EXTERIOR	RM.	ROOM
F.D.	FLOOR DRAIN	S.&R.	SHELF AND ROD
F.E.C.	FIRE EXTINGUISHER CABINET	S.S.	STAINLESS STEEL
F.F.E.	FINISH FLOOR ELEVATION	SAN.	SANITARY
FDS	FOLD DOWN SEAT	SB	SPLASHBLOCK
FH	FIRE HYDRANT	SCHED.	SCHEDULE
FIN.	FINISH	SD	SOAP DISH
FL.	FLOOR	SEC.	SECTION, SECRETARY
FOB	FACE OF BRICK	SGNL.	SIGNAL
FTG.	FOOTING	SHLVG.	SHELVING
FZR.	FREEZER	SIM.	SIMILAR
G.B.	GRAB BAR	SPECS.	SPECIFICATIONS
GA.	GAUGE	SS	SANITARY SEWER
GAL.	GALLON	STD.	STANDARD
GALV.	GALVANIZED	STL.	STEEL
GEN.	GENERAL	STO.	STORAGE
GYP.	GYPSUM	STRUCT.	STRUCTURAL
GYP. BD.	GYPSUM BOARD	SYS.	SYSTEM
H.B.	HOSE BIBB	T./TOIL./TL T.	TOILET
H.M.	HOLLOW METAL		
HCM	HANDICAPPED MIRROR	T.O.S.	TOP OF STEEL
HD.	HEAD	T.O.W.	TOP OF WALL
HRDBD	HARDBOARD	TB	TOWEL BAR
I.D.	INSIDE DIAMETER	TBL.	TABLE
INFO.	INFORMATION	TECH.	TECHNICIAN
INSUL.	INSULATION	TEL.	TELEPHONE
INT.	INTERIOR	THK.	THICK
INV.	INVERT	THKNS.	THICKNESS
JT.	JOINT	TPH	TOILET PAPER HOLDER
KIT.	KITCHEN	TRAIN.	TRAINING
LAB.	LABORATORY	TRANS.	TRANSFORMER
LAV.	LAVATORY	TREAT.	TREATMENT
LKR.	LOCKER	TYP.	TYPICAL
M.O.	MASONRY OPENING	U.N.O.	UNLESS NOTED OTHERWISE
MACH.	MACHINE	UNEXP.	UNEXPOSED
MAINT.	MAINTENANCE	VEST.	VESTIBULE
MAT'L	MATERIAL	W.H.F.E.	WALL HUNG FIRE EXTINGUISHER
		W/	WITH
		WC/W.C.	WATER CLOSET
		WD.	WOOD
		WP.	WATERPROOF(ING)

GENERAL PROJECT NOTES

1. DIAGRAMMATIC DRAWINGS: THE DRAWINGS ARE DIAGRAMMATIC IN NATURE. THE DRAWINGS REPRESENT THE INTENT OF THE PROJECT WORK.
2. VERIFY CONDITIONS: INVESTIGATE THE SITE AND VERIFY EXISTING CONDITIONS (BOTH EXPOSED AND CONCEALED) PRIOR TO PRICING THE JOB.
3. DO NOT SCALE DRAWINGS.
4. COORDINATE NEW ITEMS: EXACT LOCATIONS OF ALL EQUIPMENT, DEVICES / OUTLETS, FIXTURES, CASEWORK, MOUNTS, AND ROUTING OF UTILITIES SHALL BE COORDINATED WITH AND APPROVED BY THE OWNER.
5. UTILITIES: UTILITIES AND SYSTEMS IN AREAS OUTSIDE THE CONSTRUCTION LIMITS SHALL REMAIN (U.N.O.).
6. PROTECT / RESTORE: PROTECT EXISTING ITEMS, EQUIPMENT, FINISHES, ETC., TO REMAIN. REPAIR / REPLACE / RESTORE CONDITIONS THAT ARE DAMAGED OR DISTURBED AS A RESULT OF DEMOLITION OR NEW WORK.
7. COORDINATE TRADES: GENERAL CONTRACTOR IS RESPONSIBLE FOR COORDINATION BETWEEN TRADES. MECHANICAL DUCTWORK & EQUIPMENT SHALL HAVE PRIORITY OVER OTHER DISCIPLINES (FOR INSTALLATION & ROUTING). COORDINATE UTILITIES, SO THEY ARE INSTALLED IN AN ORDERLY AND UNIFORM MANNER.
8. SHUTDOWNS / DOWNTIME: CONTRACTOR SHALL MAKE EVERY EFFORT TO MINIMIZE DOWNTIME ASSOCIATED WITH SCHEDULED SHUTDOWNS. COORDINATE WITH OWNER.
9. MAINTAIN RATINGS: MAINTAIN FIRE / SMOKE RATINGS OF EXISTING PARTITIONS AND BARRIERS.
10. SUPPORT / BLOCKING: PROVIDE SUPPORT FOR NEW WORK. IF HANGERS, BACKERS, OR OTHER SUPPORTS ARE NOT DETAILED, NOTED, OR SPECIFIED, CONTRACTOR SHALL SUBMIT A VIABLE SUPPORT DETAIL TO THE ARCHITECT FOR APPROVAL. ALL BLOCKING SHALL BE METAL (U.N.O.) ALL WOOD BLOCKING, WHERE SPECIFIED, SHALL BE FIRE RETARDANT (U.N.O.)
11. CODES: COMPLY WITH ALL APPLICABLE FEDERAL, STATE AND LOCAL CODES.
12. SEISMIC: NON-STRUCTURAL COMPONENTS SHALL WITHSTAND THE EFFECTS OF EARTHQUAKE MOTIONS DETERMINED ACCORDING TO ASCE/SEI 7. PROVIDE ENGINEERED SUPPORTS PER SEISMIC CLASSIFICATION AND ASCE/SEI 7 REQUIRMENTS.
13. CONTRACTOR SHALL NOT DISRUPT OR LIMIT THE FACILITY'S LIFE SAFETY PLAN AND SYSTEM.
14. CONTRACTOR IS RESPONSIBLE FOR OBTAINING ALL LOCAL AND STATE CONSTRUCTION PERMITS.

NON-STRUCTURAL SEISMIC NOTES

1. COMPONENTS SHALL WITHSTAND THE EFFECTS OF EARTHQUAKE MOTIONS DETERMINED ACCORDING TO ASCE/SEI 7.
2. THE TERM "WITHSTAND" MEANS "THE SYSTEM WILL REMAIN IN PLACE WITHOUT SEPARATION OF ANY PARTS WHEN SUBJECTED TO THE SEISMIC FORCES SPECIFIED AND THE SYSTEM WILL BE FULLY OPERATIONAL AFTER THE SEISMIC EVENT."
3. ASSIGNED SEISMIC USE GROUP OR BUILDING DESIGN CATEGORY AS DEFINED IN THE IBC:

COMPONENTS WITH AN IMPORTANCE FACTOR OF 1.5:

- FUEL OIL PIPING AND EQUIPMENT.
- NATURAL GAS PIPING.
- FIRE SPRINKLERS AND EQUIPMENT.
- MEDICAL GAS PIPING AND EQUIPMENT.
- DUCTWORK CARRYING RADIOACTIVE AGENTS AND INFECTIOUS ISOLATION AIR.
- GENERATOR ENGINE EXHAUST.
- EMERGENCY POWER DISTRIBUTION SYSTEMS INCLUDING ASSOCIATED GENERATOR, TRANSFER SWITCHES, BUS DUCTS, SWITCHBOARDS, CONDUIT, AND TRANSFORMERS.
- FIRE ALARM SYSTEM.
- DOMESTIC HOT WATER SYSTEM.
- HEATING HOT WATER SYSTEM.
- STEAM SYSTEM.
- SANITARY SEWER SERVING CRITICAL CARE AREAS.
- STORM SEWER SERVING CRITICAL CARE AREAS.

COMPONENTS WITH AN IMPORTANCE FACTOR OF 1.0:

- ALL OTHER NON-STRUCTURAL COMPONENTS WITHIN THE HVAC, MECHANICAL, PLUMBING, AND ELECTRICAL SYSTEMS ARE ASSIGNED AN IMPORTANCE FACTOR OF 1.0 AND ARE ELIGIBLE FOR THE LATERAL BRACING EXEMPTIONS LISTED IN ASCE 7 SECTION 9.6. THE EXEMPTIONS APPLY TO SPECIFIC SMALLER SIZES OF PIPING AND DUCTWORK AND LESS HEAVY EQUIPMENT. NON-EXEMPT PORTIONS OF THESE SYSTEMS SHALL STILL BE LATERALLY BRACED. SYSTEMS WITH AN IMPORTANCE FACTOR OF 1.0 ARE CONSIDERED BY THE CODE TO BE NOT CRITICAL FOR THE CONTINUED OPERATION OF THE FACILITY.

SYMBOL LEGEND

EARTH
CONCRETE
CONC. MASONRY UNITS
GYPSUM BOARD
FINISH WOOD
BATT INSULATION
STEEL SECTION
GRAVEL FILL
EIFS INSULATION BOARD

/ A ##.## — SECTION INDICATOR

NOTE: THE DIRECTION OF THE SECTION INDICATOR'S FLAG MAY REFLECT AN "OPPOSITE HAND" OR "MIRRORED VIEW" OF BUILDING AND WALL SECTIONS

/ A ##.## — ENLARGED PLAN NUMBER / SHEET NUMBER

CALLOUT

/ A ##.## — ELEVATION TAG

A — WINDOW TAG

101 — DOOR TAG

HANDICAP ACCESSIBLE

0000-000 — EQUIPMENT TAG

PLAN REVIEW DATA

PROJECT: TDOT HENDERSON COUNTY MTC. BUILDING
PROJECT # 39999-3609-04 PIN NO: 131121.0

LOCATION: 370 ROCK MILAM ROAD, CEDAR GROVE TN, 38321

DESCRIPTION: NEW FULLY INSULATED, PRE-FAB METAL MAINTENANCE BUILDING WITH OFFICES,BREAK ROOM, RESTROOMS AND MEZZANINE

A. APPLICABLE STATUTES:

STATE OF TENNESSEE

2012 INTERNATIONAL BUILDING CODE (IBC)
2012 LSC - NFPA - 101 LIFE SAFETY CODE
2012 INTERNATIONAL FIRE CODE (IFC)
2012 INTERNATIONAL PLUMBING CODE (IPC)
2012 INTERNATIONAL MECHANICAL CODE (IMC)
2006 INTERNATIONAL ENERGY CONSERVATION CODE (IECC) - (FOR S-1 OCCUPANCY)
2012 NATIONAL ELECTRIC CODE (NEC)
2012 INTERNATIONAL FUEL GAS CODE
2010 ADA AMERICANS WITH DISABILITIES ACT ACCESSIBILITY GUIDELINES

B. AUTHORITIES HAVING JURISDICTION (AHJ):

STATE OF TENNESSEE - DEPARTMENT OF COMMERCE AND INSURANCE
DIVISION OF FIRE PREVENTION - ADMINISTRATIVE SERVICES SECTION
500 JAMES ROBERTSON PARKWAY
NASHVILLE, TENNESSEE 37243-0577
615.741.2981

C. OCCUPANCY: NON-SEPARATED MIXED OCCUPANCY

IBC 2012:	STORAGE OCCUPANY, MODERATELY HAZARD S-1	IBC SECTION 311
	BUSINESS B	IBC SECTION 508.3
NFPA 2012:	STORAGE OCCUPANCY, ORDINARY HAZARD	NFPA CH. 42

D. CONSTRUCTION TYPE:

IBC 2012:	TYPE VB - NON SPRINKLERED	IBC TABLE 601
NFPA 2012:	TYPE V (000) - NON SPRINKLERED	NFPA CH. 42

E. BUILDING HEIGHT & AREA:

ALLOWED HEIGHT:	1 STORY	IBC TABLE 503
ALLOWED AREA:	9,000 S.F.	IBC TABLE 503
EXISTING AREA:	N/A	
PROPOSED AREA:	3,260 S.F.	
EXISTING HEIGHT:	N/A	
PROPOSED HEIGHT:	1 STORY (W/ MEZZANINE)	

F. OCCUPANT LOAD:

AREA DESCRIPTION	LOAD FACTOR	TOTAL AREA	OCCUPANTS
MEZZANINE STORAGE	300 GSF / OCCUPANT	917 GSF	3
OFFICE AREAS	100 GSF / OCCUPANT	917 GSF	10
PARKING GARAGES	200 GSF / OCCUPANT	2,125 GSF	11
			24 TOTAL
(MOST RESTRICTIVE)			
BUSINESS	100 GSF / OCCUPANT	3,959 GSF	**40 TOTAL**

G. EXIT REQUIREMENTS:

EGRESS WIDTH:	0.2 PER OCCUPANT	
MAX EGRESS: 1.6"	DISTANCE: 150' MAX. TRAVEL TO EXIT	
EXTERIOR DOOR SWING:	OCCUPANCY < 50; DOORS PERMISSIBLE TO SWING IN	IBC SECTION 1008.1.2

H. FIRE PROTECTION REQUIREMENTS (IBC TABLE 601 & NFPA A.8.2.1.2):

STRUCTURAL FRAME:	0 HR
BEARING WALLS (EXTERIOR):	0 HR
BEARING WALLS (INTERIOR):	0 HR
NON-BEARING WALLS & PARTITIONS (EXTERIOR)	0 HR
NON-BEARING WALLS & PARTITIONS (INTERIOR):	0 HR
FLOOR CONSTRUCTION:	0 HR
ROOF CONSTRUCTION:	0 HR

I. HANDICAPPED ACCESSIBILITY REQUIREMENTS:

ACCESSIBILITY:	ALL PUBLIC AREAS - ADAAG, ANSI
PARKING:	2% OF PARKING SPACES OR 1/25 > OR 2/26-50
PROPOSED:	NO CHANGE (N/A)

J. BUILDING LOCATION CLIMATE ZONE:

IECC CLIMATE ZONE 3

K. MEZZANINE:

IBC 505.2.3 EXCEPTION 1 - CURRENT OCCUPANT LOAD FOR MEZZANINE IS 3

MEZZANINES OR PORTIONS THEREOF ARE NOT REQUIRED TO BE OPEN TO THE ROOM IN WHICH THE MEZZANINES ARE LOCATED, PROVIDED THAT THE OCCUPANT LOAD OF THE AGGREGATE AREA OF THE ENCLOSED SPACE IS NOT GREATER THAN 10

THESE PLANS AND SPECIFICATIONS ARE NOT APPROVED FOR JOB SITE USE UNTIL A FINAL CERTIFICATE OF OCCUPANCY OR PROJECT COMPLETION FORM IS ISSUED BY THIS OFFICE.
No alterations, additions, or modifications of any kind are allowed to this approved set without written permission of this office.
TENNESSEE STATE FIRE MARSHAL'S OFFICE

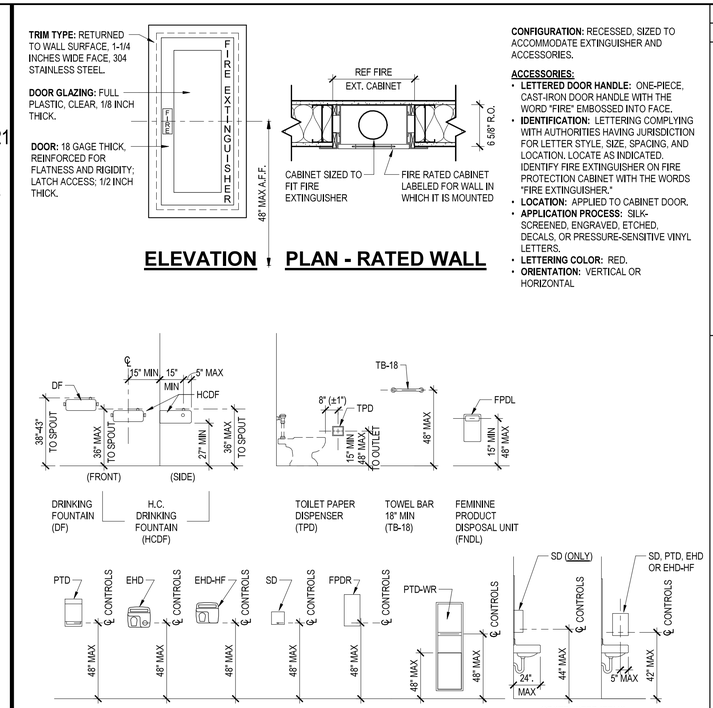

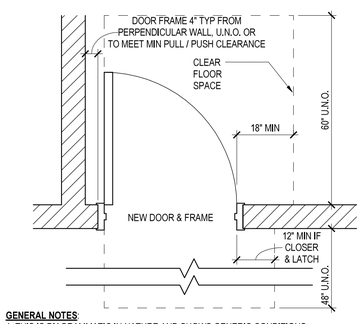

GENERAL NOTES:

1. THIS IS DIAGRAMMATIC IN NATURE AND SHOWS GENERIC CONDITIONS. SEE FLOOR PLANS FOR ACTUAL CONDITIONS.
2. MAINTAIN NOTED CLEARANCES AT ALL DOORS, U.N.O.
3. NEW DOOR PANELS SHOWN AT 90 DEGREE ANGLE AND DARK.
4. EXISTING DOOR PANELS SHOWN AT 45 DEGREE ANGLE AND SCREENED BACK.
5. EXISTING DOOR FRAMES SHOWN SCREENED BACK. NEW DOOR FRAMES SHOWN DARK.

DOOR CLEAR FLOOR SPACE

0 6" 1' 2' 3'

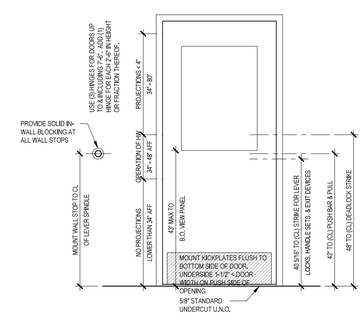

DOOR HARDWARE PLACEMENT

~~HEIGHT~~

0 6" 1' 2' 3'

PROJECT NO.	39999-3609-04
PIN NO.	131121.00

REVISIONS

DESCRIPTION	BY	DATE

TDOT HENDERSON COUNTY MAINTENANCE BUILDING
370 ROCK MILAM ROAD, CEDAR GROVE TN, 38321

DATE APRIL 20, 2023
PHASE CONSTRUCTION

FIELD SET TFM# 21349 PROJECT# 2024-04-17-10

Wold HFR DESIGN
214 Centerview Drive Suite 300
Brentwood, TN 37027
woldae.com phone: 615.370.8500
fax: 615.370.8530

SSR Smith Seckman Reid, Inc.
2650 Thousand Oaks Boulevard, Suite 3200
Memphis, TN 38118
(901) 683-3900
FAX: (901) 683-3990
www.ssr-inc.com

SEALED BY

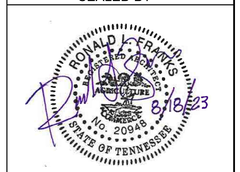

STATE OF TENNESSEE
DEPARTMENT OF TRANSPORTATION

GENERAL DATA

G 02.01

SHEET 3 OF 34

UTILITY NOTE: LOCATION OF EXISTING UNDERGROUND UTILITIES ARE APPROXIMATE AND NOT NECESSARILY THE SAME. THE CONTRACTOR SHALL BE RESPONSIBLE FOR CONTACTING THE APPROPRIATE UTILITY COMPANY TO DETERMINE THE EXACT LOCATION OF ALL UTILITIES AND UNDERGROUND STRUCTURES PRIOR TO THE INITIATION OF ANY CONSTRUCTION. CONTRACTOR SHALL ASSUME FULL RESPONSIBILITY FOR DAMAGE TO ANY UTILITIES ENCOUNTERED WITHIN CONSTRUCTION LIMITS. CALL 1-800-351-1111 FOR UTILITY LOCATIONS. CONTACT LOCAL UTILITY DISTRICT.

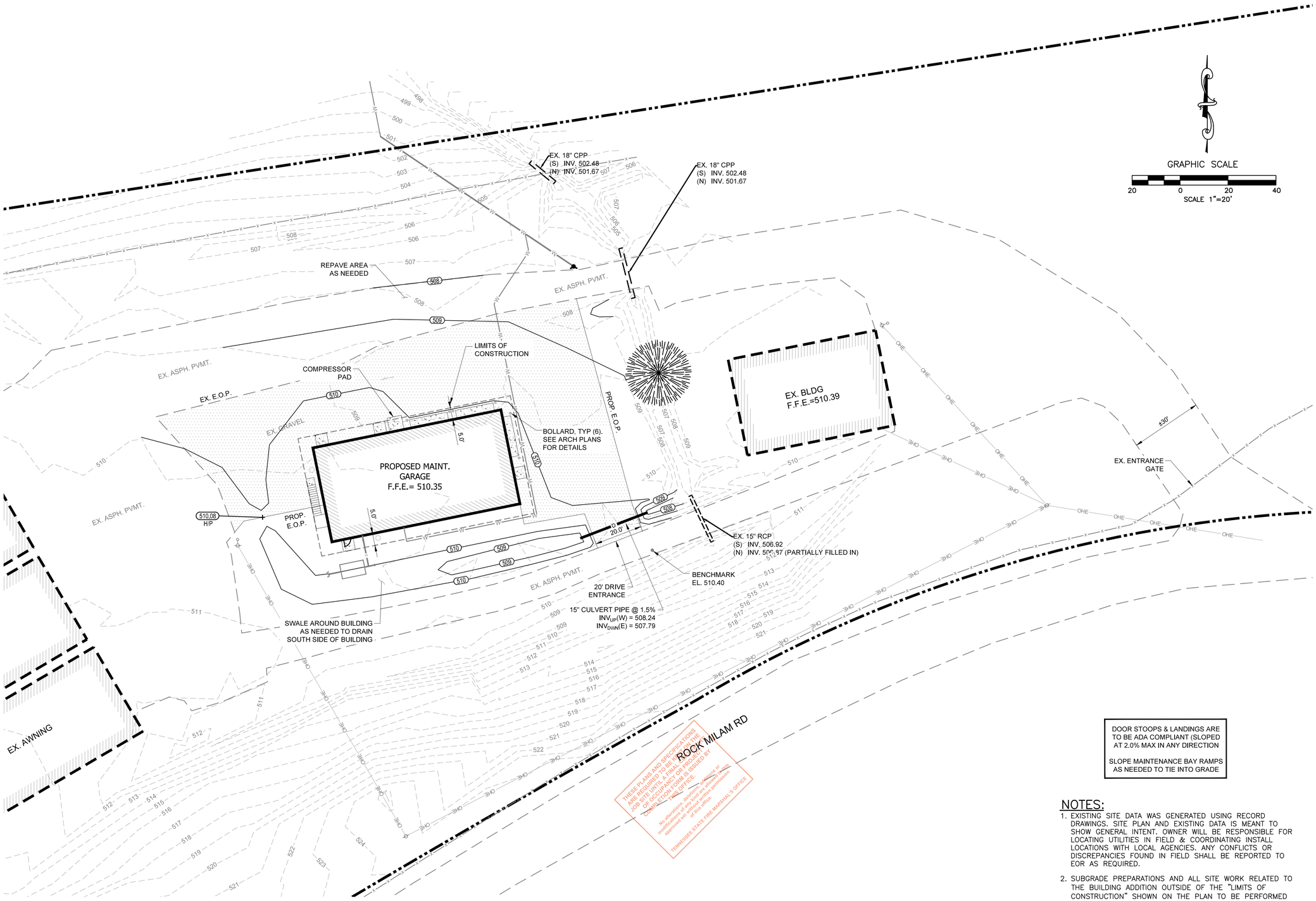

DOOR STOOPS & LANDINGS ARE TO BE ADA COMPLIANT (SLOPED AT 2.0% MAX IN ANY DIRECTION

SLOPE MAINTENANCE BAY RAMPS AS NEEDED TO TIE INTO GRADE

NOTES:

1. EXISTING SITE DATA WAS GENERATED USING RECORD DRAWINGS. SITE PLAN AND EXISTING DATA IS MEANT TO SHOW GENERAL INTENT. OWNER WILL BE RESPONSIBLE FOR LOCATING UTILITIES IN FIELD & COORDINATING INSTALL LOCATIONS WITH LOCAL AGENCIES. ANY CONFLICTS OR DISCREPANCIES FOUND IN FIELD SHALL BE REPORTED TO EOR AS REQUIRED.
2. SUBGRADE PREPARATIONS AND ALL SITE WORK RELATED TO THE BUILDING ADDITION OUTSIDE OF THE "LIMITS OF CONSTRUCTION" SHOWN ON THE PLAN TO BE PERFORMED BY OWNER.

PROJECT NO.	39999-3609-04
PIN NO.	131121.0

REVISIONS

DESCRIPTION	BY	DATE

TDOT HENDERSON COUNTY MAINTENANCE BUILDING

370 ROCK MILAM ROAD
CEDAR GROVE, TN 38321

PHASE: CONSTRUCTION
DATE: AUGUST 18, 2023

Wold HFR DESIGN
214 Centerview Drive Suite 300
Brentwood, TN 37027
woldae.com phone: 615.370.8500
fax: 615.370.8530

SSR Smith Seckman Reid, Inc.
2650 Thousand Oaks Boulevard, Suite 4200
Memphis, TN 38118
(901) 683-3900
FAX: (901) 683-3990
www.ssr-inc.com

SEALED BY

BRANDON M. TALLON REGISTERED ENGINEER AGRICULTURE 11/17/98 STATE OF TENNESSEE 4/17/24

STATE OF TENNESSEE
DEPARTMENT OF TRANSPORTATION

SITE PLAN

C1.0

SHEET 4 OF 34

FIELD SET TFM# 21349 PROJECT# 2024-04-17-10

UTILITY NOTE: LOCATION OF EXISTING UNDERGROUND UTILITIES ARE APPROXIMATE AND NOT NECESSARILY THE SAME. THE CONTRACTOR SHALL BE RESPONSIBLE FOR CONTACTING THE APPROPRIATE UTILITY COMPANY TO DETERMINE THE EXACT LOCATION OF ALL UTILITIES AND UNDERGROUND STRUCTURES PRIOR TO THE INITIATION OF ANY CONSTRUCTION. CONTRACTOR SHALL ASSUME FULL RESPONSIBILITY FOR DAMAGE TO ANY UTILITIES ENCOUNTERED WITHIN CONSTRUCTION LIMITS. CALL 1-800-351-1111 FOR UTILITY LOCATIONS. CONTACT LOCAL UTILITY DISTRICT.

GRAVITY PIPE BEDDING DETAIL

N.T.S

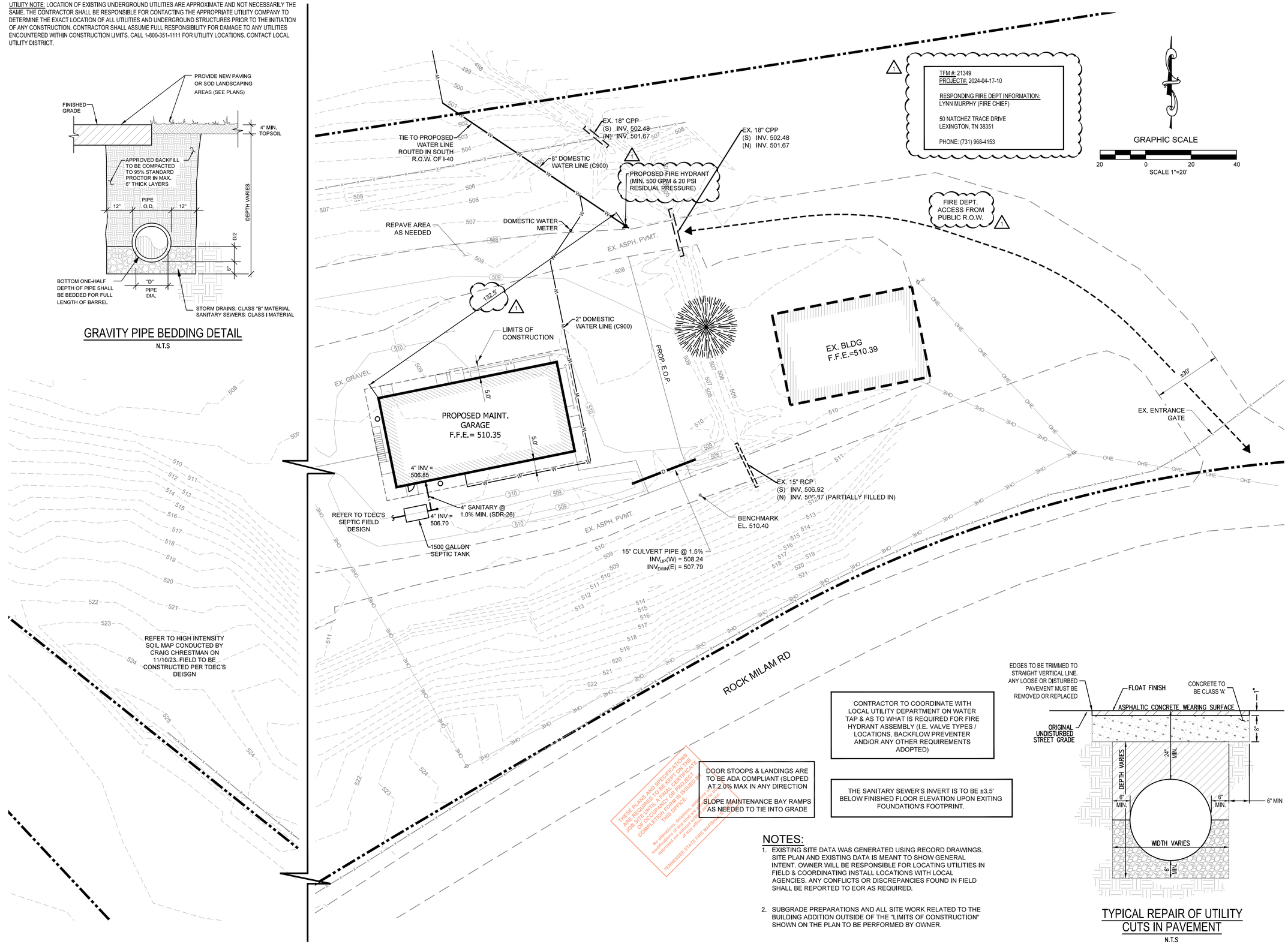

CONTRACTOR TO COORDINATE WITH LOCAL UTILITY DEPARTMENT ON WATER TAP & AS TO WHAT IS REQUIRED FOR FIRE HYDRANT ASSEMBLY (I.E. VALVE TYPES / LOCATIONS, BACKFLOW PREVENTER AND/OR ANY OTHER REQUIREMENTS ADOPTED)

DOOR STOOPS & LANDINGS ARE TO BE ADA COMPLIANT (SLOPED AT 2.0% MAX IN ANY DIRECTION

SLOPE MAINTENANCE BAY RAMPS AS NEEDED TO TIE INTO GRADE

THE SANITARY SEWER'S INVERT IS TO BE ±3.5' BELOW FINISHED FLOOR ELEVATION UPON EXITING FOUNDATION'S FOOTPRINT.

THESE PLANS AND SPECIFICATIONS ARE REQUIRED TO BE KEPT ON THE JOB SITE UNTIL A FINAL CERTIFICATE OF OCCUPANCY OR A PROJECT COMPLETION FORM IS ISSUED BY THIS OFFICE.
No alterations, additions, adjustments or other modifications are allowed to be made to this plan. Approved plans are subject to the provisions of this project's TFM#.
TENNESSEE STATE FIRE MARSHAL'S OFFICE

NOTES:

1. EXISTING SITE DATA WAS GENERATED USING RECORD DRAWINGS. SITE PLAN AND EXISTING DATA IS MEANT TO SHOW GENERAL INTENT. OWNER WILL BE RESPONSIBLE FOR LOCATING UTILITIES IN FIELD & COORDINATING INSTALL LOCATIONS WITH LOCAL AGENCIES. ANY CONFLICTS OR DISCREPANCIES FOUND IN FIELD SHALL BE REPORTED TO EOR AS REQUIRED.
2. SUBGRADE PREPARATIONS AND ALL SITE WORK RELATED TO THE BUILDING ADDITION OUTSIDE OF THE "LIMITS OF CONSTRUCTION" SHOWN ON THE PLAN TO BE PERFORMED BY OWNER.

TYPICAL REPAIR OF UTILITY CUTS IN PAVEMENT

N.T.S

PROJECT NO.	39999-3609-04
PIN NO.	131121.0

REVISIONS

DESCRIPTION	BY	DATE
△ SFM COMMENTS		8/7/24

TDOT HENDERSON COUNTY MAINTENANCE BUILDING

370 ROCK MILAM ROAD
CEDAR GROVE, TN 38321

PHASE: CONSTRUCTION
DATE: AUGUST 18, 2023

Wold HFR DESIGN
214 Centerview Drive Suite 300
Brentwood, TN 37027
woldae.com phone: 615.370.8500
fax: 615.370.8530

SSR Smith Seckman Reid, Inc.
2650 Thousand Oaks Boulevard, Suite 4200
Memphis, TN 38118
(901) 683-3900
FAX: (901) 683-3990
www.ssr-inc.com

SEALED BY

BRANDON M TAYLOR REGISTERED ENGINEER 118738 STATE OF TENNESSEE 8/7/24

STATE OF TENNESSEE
DEPARTMENT OF TRANSPORTATION

UTILITY PLAN
C2.0

SHEET 5 OF 34

FIELD SET TFM# 21349 PROJECT# 2024-04-17-10

INTERIOR WALL TYPES

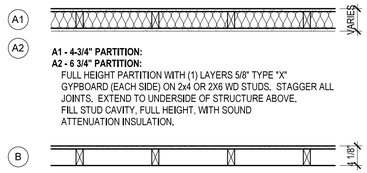

A1 - 4-3/4" PARTITION:
A2 - 6 3/4" PARTITION:
FULL HEIGHT PARTITION WITH (1) LAYERS 5/8" TYPE "X" GYPBOARD (EACH SIDE) ON 2x4 OR 2X6 WD STUDS. STAGGER ALL JOINTS. EXTEND TO UNDERSIDE OF STRUCTURE ABOVE. FILL STUD CAVITY, FULL HEIGHT, WITH SOUND ATTENUATION INSULATION.

4-1/8" PARTITION:

FULL HEIGHT PARTITION WITH (1) LAYERS 5/8" TYPE "X" GYPBOARD (ONE SIDE) ON 2x4 WD STUDS. STAGGER ALL JOINTS. EXTEND TO UNDERSIDE OF STRUCTURE ABOVE.

EXTERIOR WALL TYPES

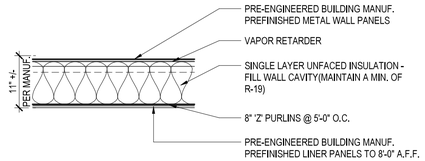

KEYNOTE SCHEDULE

(#) DENOTED BY A NUMBER ENCLOSED INSIDE A HEXAGON. ONLY NOTES APPLICABLE TO THIS SHEET ARE SHOWN.

03.01 CONCRETE SLAB-ON-GRADE OVER VAPOR BARRIER OVER COMPACTED SUBGRADE, SLOPE TO DRAIN; REF STRUCTURAL
03.02 SLOPE CONCRETE TO DRAIN TOWARDS EXTERIOR, EXTEND SLOPE INTO BUILDING TO PREVENT PONDING AND INFILTRATION AT INTERIOR OF DOORS.
03.03 4'-0" D CONCRETE APRON; REF CIVIL
03.04 5'-0" x 5'-0" CONCRETE STOOP; REF CIVIL
03.09 CUT SLAB TO SLOP TOWARDS OUTSIDE
08.12 PREFINISHED METAL OVERHEAD SECTIONAL DOOR W/ MOTOR OPERATOR
08.15 PREFINISHED METAL OVERHEAD COILING DOOR W/ MOTOR OPERATOR
10.90 PRE-ENGINEERED CANOPY, WITH FINISH TO MATCH WINDOWS. SUSPEND CANOPY BACK TO FRAMING AND SECURE. CANOPY BY METAL BUILDING MANUFACTUER, REF. SPECS
32.01 4" DIAMETER CONC. FILLED STEEL BOLLARDS, TYP.

GEN. ARCHITECTURAL NOTES

1. VERIFY ALL DIMENSIONS/WORK TO BE DONE BASED ON EXISTING CONDITIONS. NOTIFY ARCHITECT IMMEDIATELY OF ANY CONFLICTS.
2. ALL PARTITIONS ARE TO BE CONTINUOUS TO THE STRUCTURE ABOVE, (U.N.O.)
3. INSTALL SOUND ATTENUATION BATT INSULATION IN ALL INTERIOR PARTITIONS, (U.N.O.)
4. RATED WALLS: INSURE WALLS INDICATED AS RATED FIRE AND / OR SMOKE BARRIERS ARE CONTINUOUS CONSTRUCTION (THRU CORNERS AND TO THE DECK ABOVE) AND PENETRATIONS ARE PROPERLY FIRE AND SMOKE SEALED.
5. BLOCKING: PROVIDE IN ALL WALLS WHERE REQUIRED FOR HANDRAILS, WALL GUARDS, FOR SHELVING, WALL CABINETS, WALL MOUNTED DOOR STOPS AND EQUIPMENT. CUT AND PATCH GYPSUM BOARD IN EXISTING WALLS FOR INSTALLATION OF NEW BLOCKING WHERE REQUIRED. PROVIDE BLOCKING IN ALL WALLS AT WATER CLOSET LOCATIONS FOR GRAB BAR INSTALLATION WHETHER GRAB BARS ARE INDICATED OR NOT.
6. WHERE DOOR IS SHOWN IN CORNER OF ROOM, LOCATE OUTSIDE EDGE OF DOOR FRAME 4" FROM ADJACENT PERPENDICULAR WALL, (U.N.O.). ALLOW FOR PROTRUDING HARDWARE.
7. FURR OUT AROUND COLUMNS, PIPES, UTILITES, ETC., WITH THE MINIMUM DEPTH NECESSARY TO CONCEAL PIPES AND COLUMNS.
8. SURFACE PREP: PREP SURFACES FOR NEW FINISHES ACCORDING TO SPECIFICATIONS AND MANUFACTURER'S RECOMMENDATIONS.
9. STRUCTURAL SUPPORTS: PROVIDE STRUCTURAL SUPPORTS ABOVE CEILING WHERE REQUIRED FOR CEILING HUNG EQUIPMENT.
10. FRAME & DOOR FIRE LABELS: CLEAN PAINT OFF ALL NEW AND EXISTING FIRE LABELS IN SCOPE OF WORK.
11. RATINGS OF WALLS AT DOORWAYS AND VIEW WINDOWS ARE NOT SHOWN FOR DRAWING GRAPHICS CLARITY. RATINGS ARE TO CONTINUE THROUGH WALL CONTAINING DOORWAY OR VIEW WINDOWS.
12. COSMETIC FURR-OUTS AND WING WALLS MAY TERMINATE 8" ABOVE ADJACENT CEILING. CAP TOP OF WALLS SO FURR-OUT OR WIND WALL DOES NOT CREATE A BREACH IN ADJACENT WALLS THAT GO TO UNDERSIDE OF ROOF DECK. BRACE TOPS OF WALLS THAT DO NOT GO TO UNDERSIDE OF ROOF DECK ABOVE.

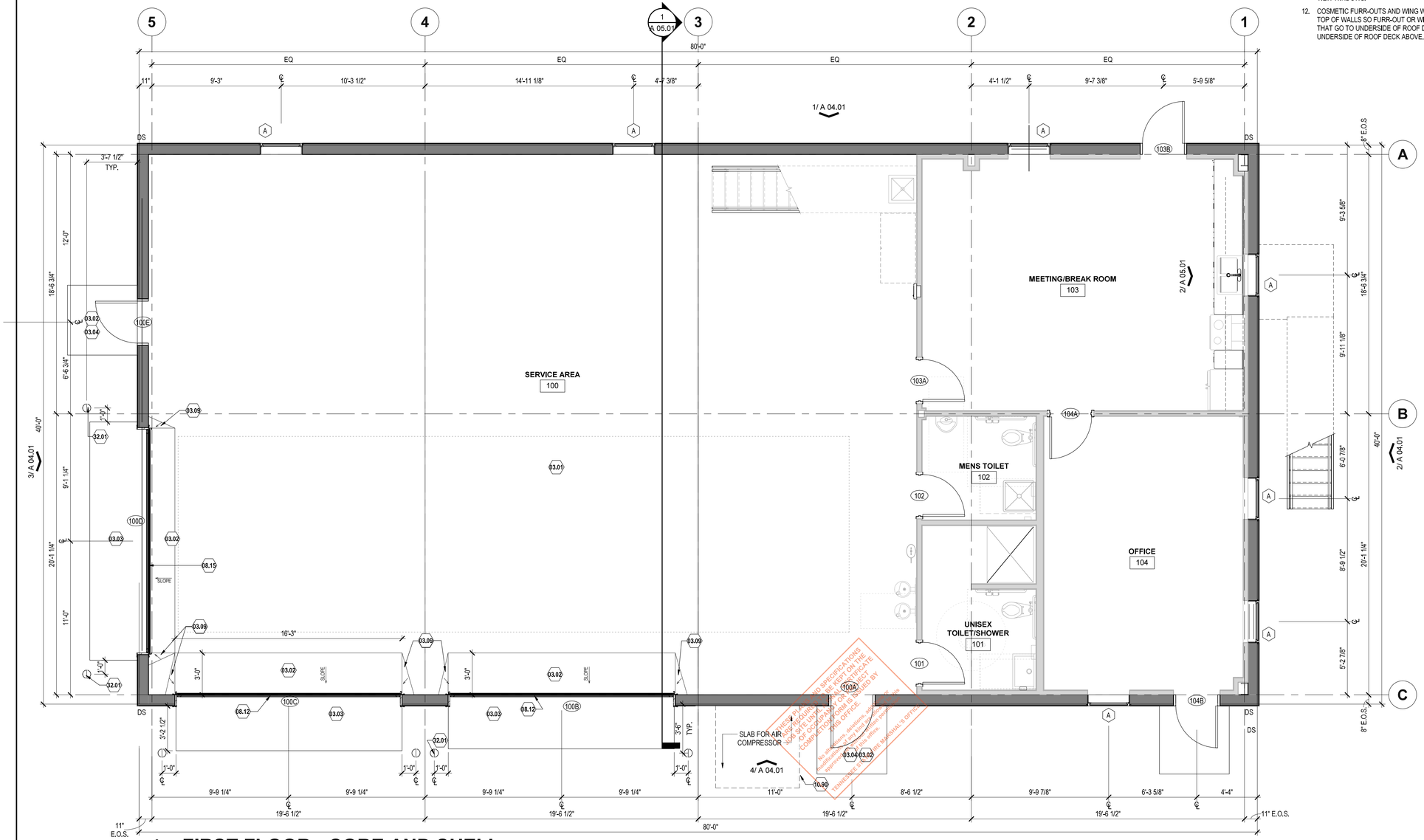

1 FIRST FLOOR - CORE AND SHELL

0 2' 4' 6'

PROJECT NO.	39999-3609-04
PIN NO.	131121.00

REVISIONS

DESCRIPTION	BY	DATE

TDOT HENDERSON COUNTY MAINTENANCE BUILDING

370 ROCK MILAM ROAD,
CEDAR GROVE TN, 38321

DATE AUGUST 18,2023
PHASE CONSTRUCTION

Wold HFR DESIGN
214 Centerview Drive Suite 300
Brentwood, TN 37027
woldae.com phone: 615.370.8500
fax: 615.370.8530

SSR Smith Seckman Reid, Inc.
2650 Thousand Oaks Boulevard,
Suite 3200
Memphis, TN 38118
(901) 683-3900
FAX: (901) 683-3990
www.ssr-inc.com

SEALED BY

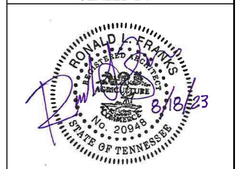

STATE OF TENNESSEE
DEPARTMENT OF
TRANSPORTATION

FIRST FLOOR - CORE AND SHELL
A 01.01

SHEET 6 OF 34

FIELD SET TFM# 20224-04-17-10

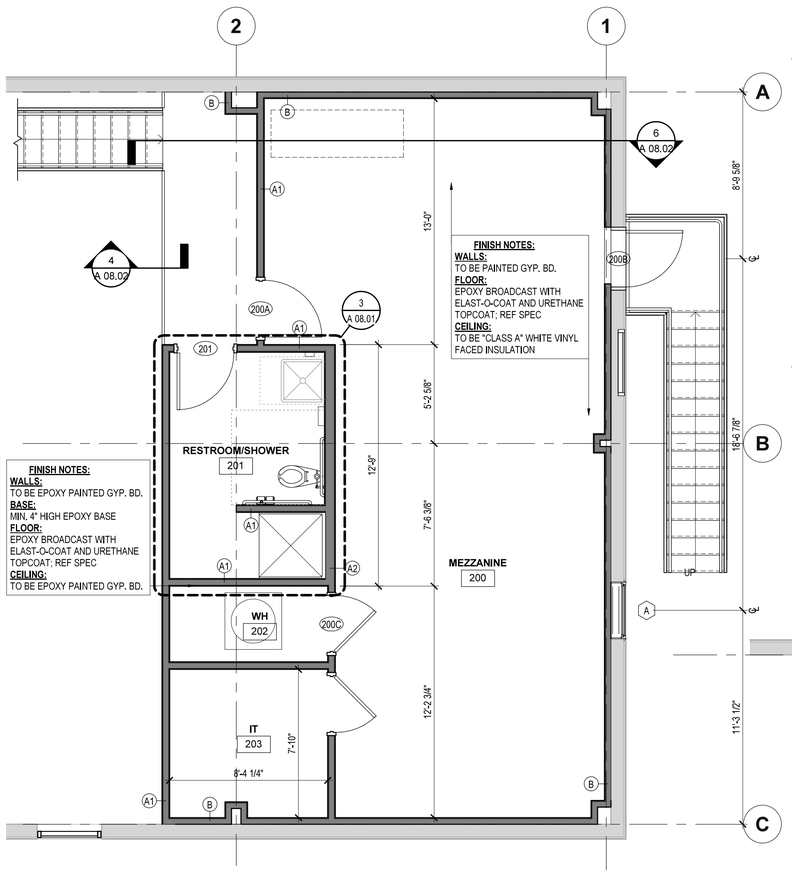

2 MEZZANINE PLAN

0 2' 4' 6'

INTERIOR WALL TYPES

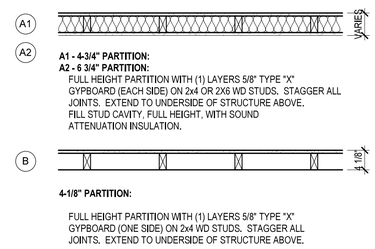

EXTERIOR WALL TYPES

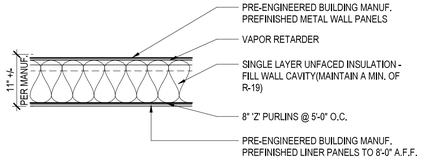

KEYNOTE SCHEDULE

(#) DENOTED BY A NUMBER ENCLOSED INSIDE A HEXAGON. ONLY NOTES APPLICABLE TO THIS SHEET ARE SHOWN.

05.03	MIN. 3'-0" W PREFAB METAL STAIRS
05.04	PAINTED STEEL GUARD @ 42" A.F.F.: 1 1/2" TOP RAIL & VERTICAL POST. 1" SQ. BOTTOMS RAIL AND 1/2" SQ. PICKETS. - TYP. EACH SIDE OF STAIR
05.05	PAINTED STEEL HANDRAILS @ 36" A.F.F.: 1 1/2" TOP RAIL. - TYP. EACH SIDE OF STAIR
06.80	SOLID SURFACE COUNTERTOPS. COORDINATE SYLE AND FINISH WITH OWNER
12.01	REFRIGERATOR, O.F.C.I
12.02	ELECTRIC RANGE WITH RESIDENTAIL HOOD, O.F.C.I
22.08	MOP SINK
22.09	DOUBLE BOWL SINK
27.20	WALL MOUNTED TV. TV AND MOUNT OFCI. PROVIDE BLOCKING

GEN. ARCHITECTURAL NOTES

1. VERIFY ALL DIMENSIONS/WORK TO BE DONE BASED ON EXISTING CONDITIONS. NOTIFY ARCHITECT IMMEDIATELY OF ANY CONFLICTS.
2. ALL PARTITIONS ARE TO BE CONTINUOUS TO THE STRUCTURE ABOVE, (U.N.O.)
3. INSTALL SOUND ATTENUATION BATT INSULATION IN ALL INTERIOR PARTITIONS, (U.N.O.)
4. RATED WALLS: INSURE WALLS INDICATED AS RATED FIRE AND / OR SMOKE BARRIERS ARE CONTINUOUS CONSTRUCTION (THRU CORNERS AND TO THE DECK ABOVE) AND PENETRATIONS ARE PROPERLY FIRE AND SMOKE SEALED.
5. BLOCKING: PROVIDE IN ALL WALLS WHERE REQUIRED FOR HANDRAILS, WALL GUARDS, FOR SHELVING, WALL CABINETS, WALL MOUNTED DOOR STOPS AND EQUIPMENT. CUT AND PATCH GYPSUM BOARD IN EXISTING WALLS FOR INSTALLATION OF NEW BLOCKING WHERE REQUIRED. PROVIDE BLOCKING IN ALL WALLS AT WATER CLOSET LOCATIONS FOR GRAB BAR INSTALLATION WHETHER GRAB BARS ARE INDICATED OR NOT.
6. WHERE DOOR IS SHOWN IN CORNER OF ROOM, LOCATE OUTSIDE EDGE OF DOOR FRAME 4" FROM ADJACENT PERPENDICULAR WALL, (U.N.O.). ALLOW FOR PROTRUDING HARDWARE.
7. FURR OUT AROUND COLUMNS, PIPES, UTILITES, ETC., WITH THE MINIMUM DEPTH NECESSARY TO CONCEAL PIPES AND COLUMNS.
8. SURFACE PREP: PREP SURFACES FOR NEW FINISHES ACCORDING TO SPECIFICATIONS AND MANUFACTURER'S RECOMMENDATIONS.
9. STRUCTURAL SUPPORTS: PROVIDE STRUCTURAL SUPPORTS ABOVE CEILING WHERE REQUIRED FOR CEILING HUNG EQUIPMENT.
10. FRAME & DOOR FIRE LABELS: CLEAN PAINT OFF ALL NEW AND EXISTING FIRE LABELS IN SCOPE OF WORK.
11. RATINGS OF WALLS AT DOORWAYS AND VIEW WINDOWS ARE NOT SHOWN FOR DRAWING GRAPHICS CLARITY. RATINGS ARE TO CONTINUE THROUGH WALL CONTAINING DOORWAY OR VIEW WINDOWS.
12. COSMETIC FURR-OUTS AND WING WALLS MAY TERMINATE 8" ABOVE ADJACENT CEILING. CAP TOP OF WALLS SO FURR-OUT OR WIND WALL DOES NOT CREATE A BREACH IN ADJACENT WALLS THAT GO TO UNDERSIDE OF ROOF DECK. BRACE TOPS OF WALLS THAT DO NOT GO TO UNDERSIDE OF ROOF DECK ABOVE.

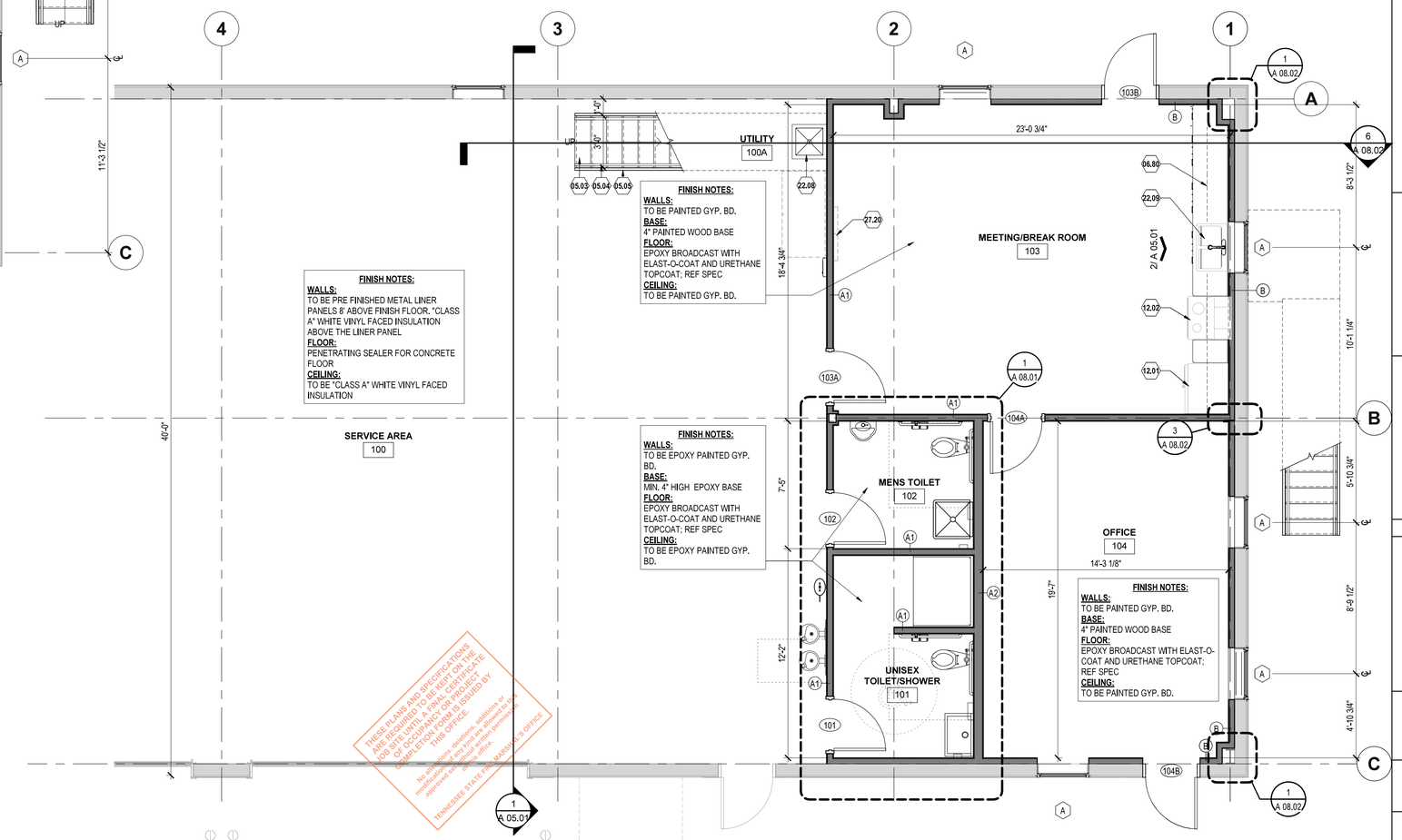

THESE PLANS AND SPECIFICATIONS ARE REQUIRED TO BE KEPT ON THE JOB SITE UNTIL A FINAL CERTIFICATE OF OCCUPANCY OR PROJECT COMPLETION FORM IS ISSUED BY THE OFFICE.
No additions, deletions, additions or modifications to the original drawings and specifications are permitted without the written permission of the TENNESSEE STATE FIRE MARSHAL'S OFFICE.

1 FIRST FLOOR PLAN

0 2' 4' 6'

PROJECT NO.	39999-3609-04
PIN NO.	131121.00

REVISIONS

DESCRIPTION	BY	DATE

TDOT HENDERSON COUNTY MAINTENANCE BUILDING

370 ROCK MILAM ROAD,
CEDAR GROVE TN, 38321

DATE AUGUST 18,2023

PHASE CONSTRUCTION

Wold HFR DESIGN
214 Centerview Drive Suite 300
Brentwood, TN 37027
woldae.com phone: 615.370.8500
fax: 615.370.8530

SSR Smith Seckman Reid, Inc.
2650 Thousand Oaks Boulevard,
Suite 3200
Memphis, TN 38118
(901) 683-3900
FAX: (901) 683-3990
www.ssr-inc.com

SEALED BY

RONALD K. FRANKS REGISTERED ARCHITECT ARCHITECTURE NO. 20949 STATE OF TENNESSEE
8/18/23

STATE OF TENNESSEE
DEPARTMENT OF
TRANSPORTATION

FIRST FLR. / MEZZ. BUILD-OUT
A 01.03

SHEET 7 OF 34

FIELD SET TFM# 21349 PROJECT# 2024-04-17-10

KEYNOTE SCHEDULE

(#) **DENOTED BY A NUMBER ENCLOSED INSIDE A HEXAGON. ONLY NOTES APPLICABLE TO THIS SHEET ARE SHOWN.**

07.51 PRE-ENGINEERED BUILDING MANUF. DOWNSPOUT (DS)
07.52 RIDGE VENT
07.53 PRE-ENGINEERED BUILDING MANUF. GUTTER

GENERAL ROOF NOTES

1. ROOF SLOPE SHALL BE 4" PER FOOT.
2. PROVIDE CRICKETS WHERE REQUIRED FOR PROPER DRAINAGE.
3. COORDINATE WITH MPE TO PROPERLY AND DIMENSIONALLY LOCATE ALL ROOFTOP EQUIPMENT, CURBS, VENTS, ETC.
4. PAINT ANY EXPOSED ROOF MOUNTED EQUIPMENT, PIPING, ETC. WITH EXTERIOR GRADE PAINT IN COLOR AS SELECTED BY ARCHITECT, EXCEPT ITEMS THAT ARE ALUMINUM OR STAINLESS STEEL.
5. INSULATE ROOF DRAIN LEADERS, VENT STACKS, AND OTHER PLUMBING PENETRATIONS A MINIMUM OF 5'-0" ON THE INTERIOR SIDE BEYOND THE LINE AT WHICH THE PIPE PENETRATES THE ROOF / BUILDING ENVELOPE.

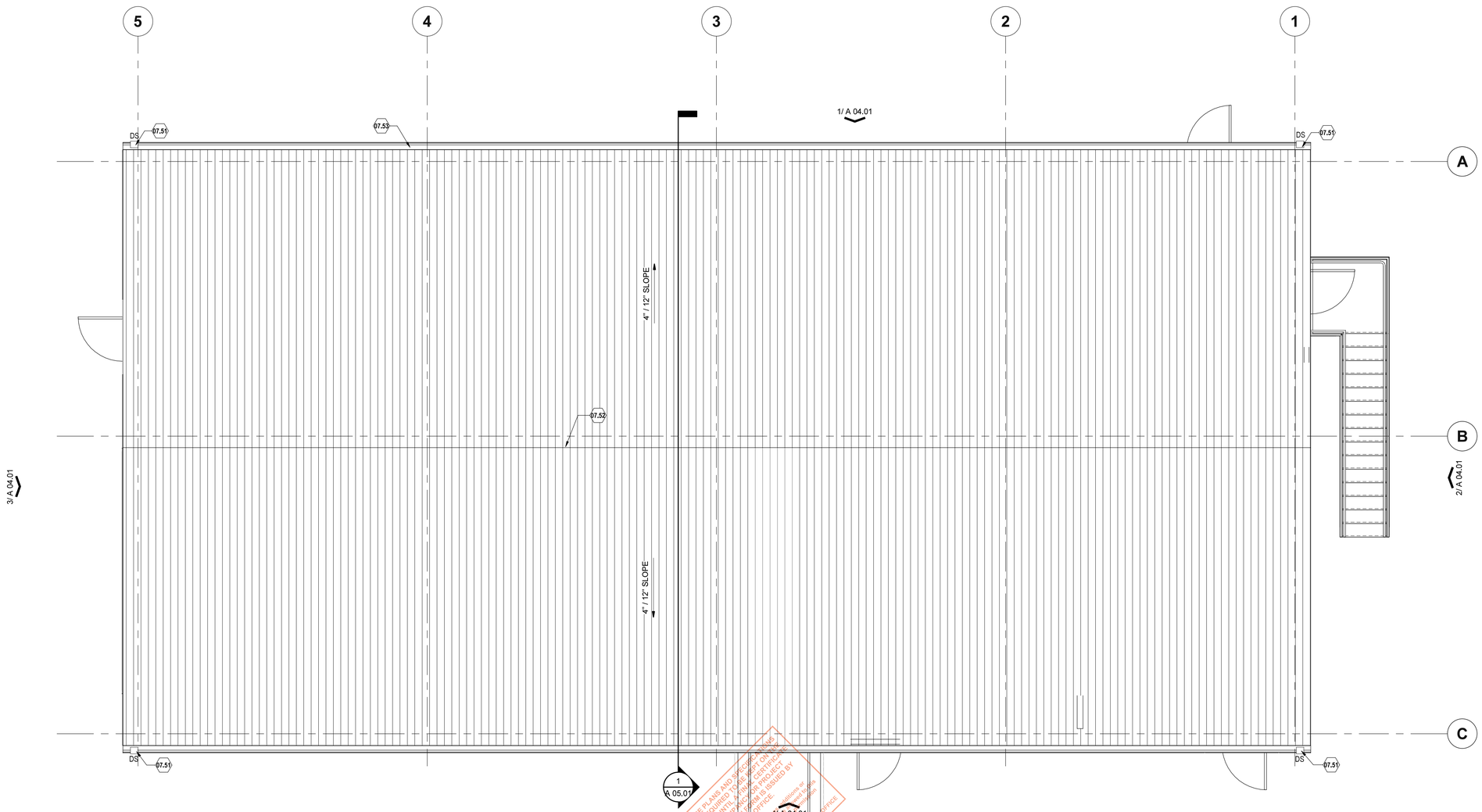

THESE PLANS AND SPECIFICATIONS ARE REQUIRED TO BE KEPT ON THE JOB SITE UNTIL TDOT HAS ISSUED OR OBTAINED A FINAL CERTIFICATE OF OCCUPANCY FOR THE PROJECT. COMPLETION AND/OR CERTIFICATE OF OCCUPANCY FOR THE PROJECT MUST BE ISSUED BY THIS OFFICE.

An inspection, review of plans, approval, issuance or maintenance of any permit by this office or approved agency shall not be construed to be an approval of any violation of any provisions of the TENNESSEE STATE FIRE MARSHAL'S OFFICE

1 ROOF PLAN

0 2' 4' 6'

PROJECT NO.	39999-3609-04
PIN NO.	131121.00

REVISIONS

DESCRIPTION	BY	DATE

TDOT HENDERSON COUNTY MAINTENANCE BUILDING

370 ROCK MILAM ROAD,
CEDAR GROVE TN, 38321

DATE AUGUST 18,2023

PHASE CONSTRUCTION

Wold HFR DESIGN
214 Centerview Drive Suite 300
Brentwood, TN 37027
woldae.com phone: 615.370.8500
fax: 615.370.8530

SSR Smith Seckman Reid, Inc.
2650 Thousand Oaks Boulevard,
Suite 3200
Memphis, TN 38118
(901) 683-3900
FAX: (901) 683-3990
www.ssr-inc.com

SEALED BY

RONALD L. FRANKS REGISTERED ARCHITECT No. 20949 STATE OF TENNESSEE
8/18/23

STATE OF TENNESSEE
DEPARTMENT OF
TRANSPORTATION

ROOF PLAN

A 02.01

SHEET 8 OF 34

FIELD SET TFM# 21349 PROJECT# 20224-04-17-10

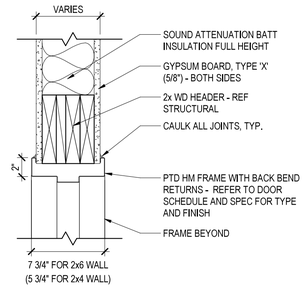

MBM - METAL BUILDING MANUFACTURER

1A HEAD

NON RATED OPENING

0 2" 4" 6" 1'

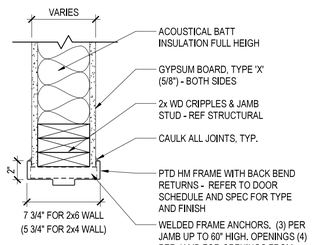

1B JAMB

NON RATED OPENING

0 2" 4" 6" 1'

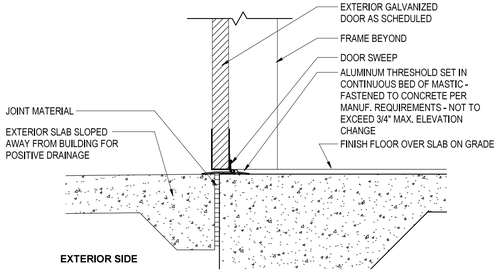

2 EXT. HM SILL - TYP.

HM EXTERIOR DOOR

0 2" 4" 6" 1'

DOOR SCHEDULE (BY NUMBER)

	DOORS							FRAMES		DETAILS		
NO.	TYPE	WIDTH	HEIGHT	THICKNESS	MATERIAL	RATING	GLAZING	TYPE	MATERIAL	HEAD	JAMB	REMARKS (Ref. Door keynotes)
100A	HG1	3'-0"	7'-0"	1 3/4"	HM	EXTERIOR	ITG	FR1	HM	--	--	1,6
100B	OH1	16'-0"	14'-0"	1 1/2"	ICS	EXTERIOR	--	--	--	4/ A03.01	--	2, 3
100C	OH1	16'-0"	14'-0"	1 1/2"	ICS	EXTERIOR	--	--	--	4/ A03.01	--	2, 3
100D	OH1	16'-0"	14'-0"	1 1/2"	ICS	EXTERIOR	--	--	--	4/ A03.01	--	3, 7
100E	HG1	3'-0"	7'-0"	1 3/4"		EXTERIOR	ITG	FR1	HM	--	--	
101	FL1	3'-0"	7'-0"	1 3/4"	HM	--	--	FR1	HM	1A/ A03.01	1B/ A03.01	5
102	FL1	3'-0"	7'-0"	1 3/4"	HM	--	--	FR1	HM	1A/ A03.01	1B/ A03.01	5
103A	FL1	3'-0"	7'-0"	1 3/4"	HM	--	--	FR1	HM	1A/ A03.01	1B/ A03.01	4
103B	HG1	3'-0"	7'-0"	1 3/4"		EXTERIOR	ITG	FR1	HM			
104A	FL1	3'-0"	7'-0"	1 3/4"	HM	--	--	FR1	HM	1A/ A03.01	1B/ A03.01	4
104B	HG1	3'-0"	7'-0"	1 3/4"	HM	EXTERIOR	ITG	--	--	--	--	1,6
200A	FL1	3'-0"	7'-0"	1 3/4"	HM	--	--	FR1	HM	1A/ A03.01	1B/ A03.01	4
200B	HG1	3'-0"	7'-0"	1 3/4"	HM	EXTERIOR	ITG	--	--	--	--	1,6
200C	FL1	3'-0"	7'-0"	1 3/4"		--	--					
200D	FL1	3'-0"	7'-0"	1 3/4"		--	--					
201	FL1	3'-0"	7'-0"	1 3/4"	HM	--	--	FR1	HM	1A/ A03.01	1B/ A03.01	5

DOOR GENERAL NOTES

GENERAL

1. REFER TO DIVISION EIGHT (8) OF THE PROJECT MANUAL FOR ADDITIONAL INFORMATION.
2. CONFLICTS / DISCREPANCIES BETWEEN THE DRAWINGS AND SPECIFICATIONS SHALL BE CLARIFIED WITH THE ARCHITECT IMMEDIATELY UPON DISCOVERY. IF NO CLARIFICATION IS REQUESTED, THE CONTRACTOR SHALL PROVIDE THE MOST STRINGENT LISTED REQUIREMENT.
3. DOORS, FRAMES, AND HARDWARE SHALL MEET THE LABEL REQUIREMENTS OF THE OPENING IN WHICH IT RESIDES. REFER TO THE LIFE SAFETY PLAN FOR ADDITIONAL INFORMATION.
4. CONTRACTOR SHALL COORDINATE WHERE DOORS / FRAMES / HARDWARE REQUIRE CONDUITS OR WIRING INSTALLED DURING FRAME INSTALLATION FOR ELECTRICAL CONNECTIONS FOR LOCKS, STRIKES, ETC.
5. ALL EXTERIOR DOOR DETAILS SHALL FOLLOW METAL BUILDING MANUFACTURERS INSTRUCTIONS

DOORS

1. PROVIDE FINISHED DOOR VERTICAL AND TOP EDGES SAME AS DOOR FACE FINISH.
2. ALL DOORS SHALL HAVE STANDARD 5/8" UNDERCUT U.N.O.
3. GLASS IN EXTERIOR HM DOORS SHALL BE INSULATED, TEMPERED.

FRAMES

1. ALL FRAMES SHALL BE LEVEL 3, 16 GAUGE U.N.O.
2. ALL EXTERIOR FRAMES SHALL BE GALVANIZED.
3. FRAMES <= 4'-0" W SHALL BE 16 GAUGE.
4. FRAMES > 4'-0"W SHALL BE 14 GAUGE.
5. ALL FRAMES SHALL BE FULLY WELDED. (KNOCK-DOWN FRAMES NOT PERMITTED.)
6. AT EXTERIOR OPENINGS, PROVIDE FRAMES WITH FOAM-IN-PLACE INSULATION.
7. CAULK DOOR FRAME AROUND THE FULL PERIMETER AND AT ALL FLOORS EXCEPT CARPETED AREAS.

HARDWARE

1. ALL HARDWARE TO BE LEVER HANDLES U.N.O.
2. TEXTURED (KNURLED) SURFACES REQUIRED ON DOOR HANDLES LEADING TO HAZARDOUS ROOMS.
3. USE WALL MOUNTED DOOR STOPS WHERE POSSIBLE. OTHERWISE, PROVIDE HEAVY DUTY CONCEALED OVERHEAD DOOR STOPS.
4. PROVIDE HEAVY DUTY HINGES ON DOORS OVER 3'-6" W.
5. CONTRACTOR SHALL COORDINATE WITH OWNER ON FINAL KEYING REQUIREMENTS. REFER TO PROJECT MANUAL FOR ADDITIONAL INFORMATION.
6. PROVIDE POSTIVELY LATCHING EXIT DEVICES WHERE INDICATED.
7. PROVIDE SMOKE LABELED GASKETING ON ALL FIRE / SMOKE RATED DOORS.
8. PROVIDE ALUMINUM THRESHOLD, WEATHERSTRIPPING, DOOR BOTTOM, AND RAINDRIP AT ALL EXTERIOR HOLLOW METAL DOORS

DOOR KEYNOTES

1. DOOR & FRAME BY PRE-ENGINEERED BUILDING MANUF.
2. ATTACHED OVERHEAD SECTIONAL DOOR TO PURLINS; ANGLE OVERHEAD TRACK TO FOLLOW ROOF SLOPE
3. COORDINATE HEAD AND JAMB DETAILS WITH DOOR MANUF. AND PRE-ENGINEERED BUILDING MANUF.
4. OFFICE: PROVIDE (4) HINGES, 1 OFFICE SET, KICK PLATE, MOP PLATE, WALL BUMPER, COAT HOOK, (3) DOOR SILENCERS
5. TLT: PROVIDE (4) HINGES, 1 PRIVACY SET, KICK PLATE, MOP PLATE, WALL BUMPER, COAT HOOK, (3) DOOR SILENCERS
6. EXTERIOR: PROVIDE: (3) HINGES, 1 EXIT DEVICE, 1 RIM CYLINDER, 1 DOOR CLOSER, 1 KICK PLATE, 1 WALL BUMPER, 1 DOOR SWEEP, 1 PERIMETER SEAL, 1 DRIP CAP, 1 THRESHOLD
7. ATTACHED OVERHEAD COILING DOOR

DOOR ABBREV.

1 - DOORS
FL FLUSH
HG HALF GLAZING
HM HOLLOW METAL
OH OVERHEAD DOOR

2 - FRAMES
FR FRAME
GA GAUGE
HM HOLLOW METAL

3 - HARDWARE
AC ACCESS CONTROL
AS ASTRAGAL
CH COAT HOOK
CL CLOSER
CR CARD READER
DS DOOR SWEEP
ED EXIT DEVICE (PANIC BAR)
EG MORTISED EDGE GUARD
ES ELECTRIC STRIKE
GS GASKETING (WEATHERSTRIPPING / SMOKE SEALS)
KH KNURLED HANDLE
KP KEY PAD
MH MAGNETIC HOLD OPEN DEVICE
ML MAGNETIC LOCKING DEVICE
MP MOP PLATE / KICK PLATE
PL POSITIVE LATCHING HARDWARE
RESCUE RESCUE HARDWARE

4 - GLAZING
IG INSULATED GLASS
ITG INSULATED TEMPERED GLASS
TG TEMPERED GLASS

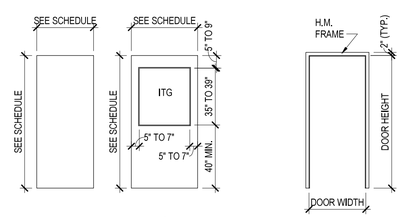

DOOR AND FRAME TYPES

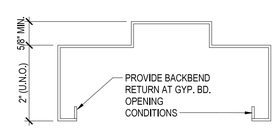

TYPICAL H.M. DOOR FRAME SECTION

NOT TO SCALE

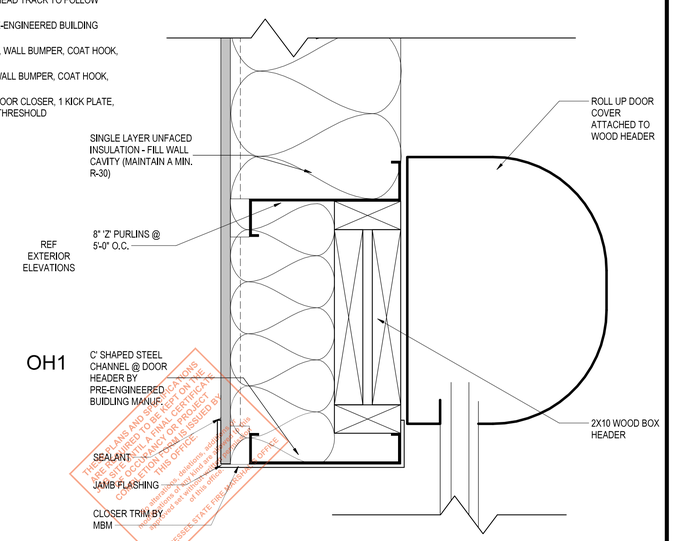

4 COILING DOOR HEAD

COILING DOOR OPENING TO BE FINISHED OUT BY MBM. REFER TO INSTALLATION INSTRUCTIONS FOR MORE INFORMATION

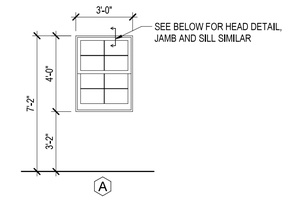

*BY PRE-ENGINEERED BUILDING MANUF.

WINDOW ELEVATIONS

NOT TO SCALE

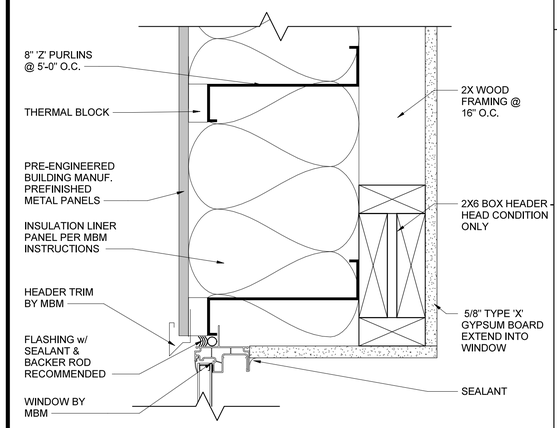

3 WINDOW DETAIL : HEAD DETAIL

SPECIFIC WINDOW DETAILS SUCH AS FLASHING/SEALANTS, ETC. ARE DETERMINED BY THE METAL BUILDING MANUFACTURERS INTALLATION DETAILS. THIS DETAIL INTENDS TO SHOW HOW THE FURRING WALL INTERACTS WITH THE METAL BUILDING. THE JAMB AND SILL CONDITIONS ARE SIMILAR

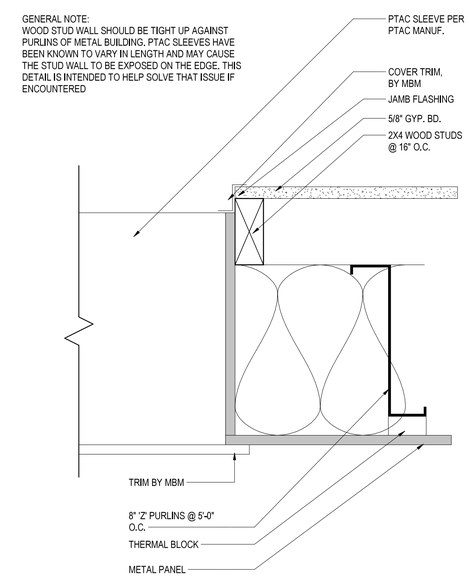

5 JAMB - PTAC SLEEVE

PENETRATION DETAILS SUCH AS FLASHING/SEALANT TO BE PROVIDED PER THE MBM DETAILS AND INSTALLATIONS INSTRUCTIONS

PROJECT NO.	39999-3609-04
PIN NO.	131121.00

REVISIONS

DESCRIPTION	BY	DATE

TDOT HENDERSON COUNTY MAINTENANCE BUILDING
370 ROCK MILAM ROAD, CEDAR GROVE TN, 38321

DATE AUGUST 18,2023
PHASE CONSTRUCTION

Wold HFR DESIGN
214 Centerview Drive Suite 300
Brentwood, TN 37027
woldae.com phone: 615.370.8500
fax: 615.370.8530

SSR Smith Seckman Reid, Inc.
2650 Thousand Oaks Boulevard, Suite 3200
Memphis, TN 38118
(901) 683-3900
FAX: (901) 683-3990
www.ssr-inc.com

SEALED BY

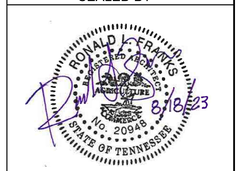

STATE OF TENNESSEE
DEPARTMENT OF TRANSPORTATION

DOORS AND WINDOWS DTLS.
A 03.01

SHEET 9 OF 34

FIELD SET TFM# 21349 PROJECT# 2024-04-17-10

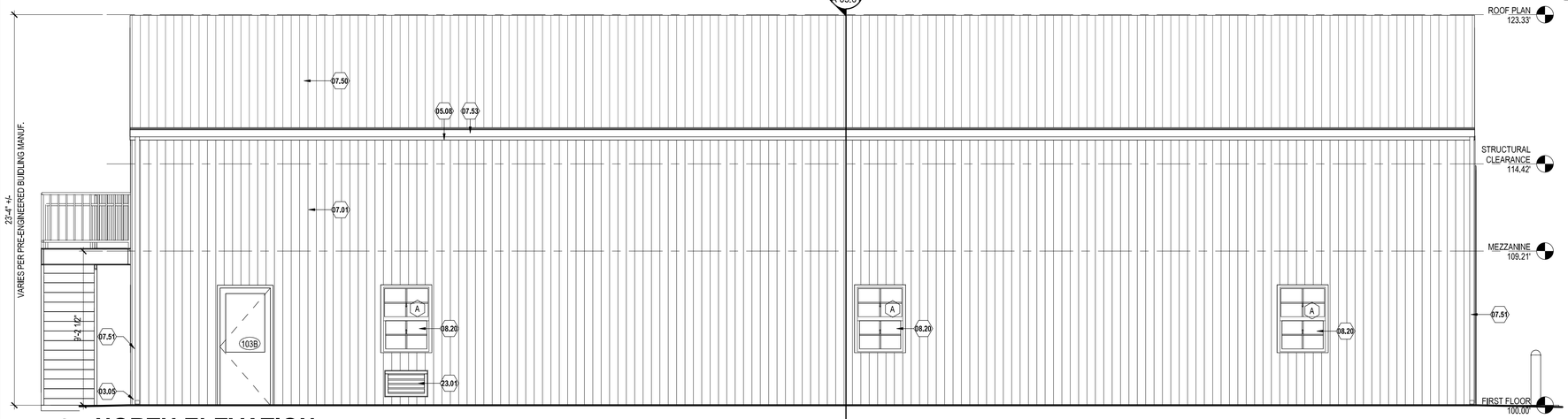

1 NORTH ELEVATION

0 2' 4' 6'

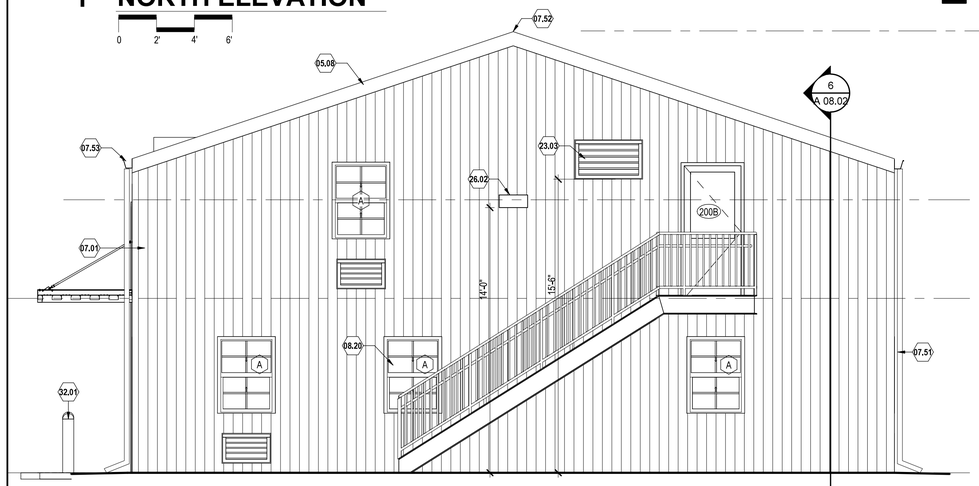

2 EAST ELEVATION

0 2' 4' 6'

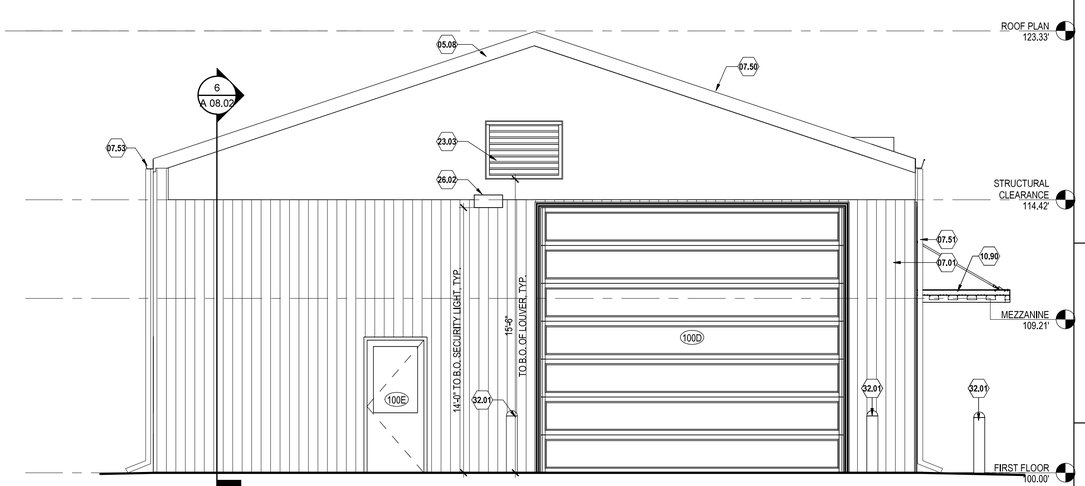

3 WEST ELEVATION

0 2' 4' 6'

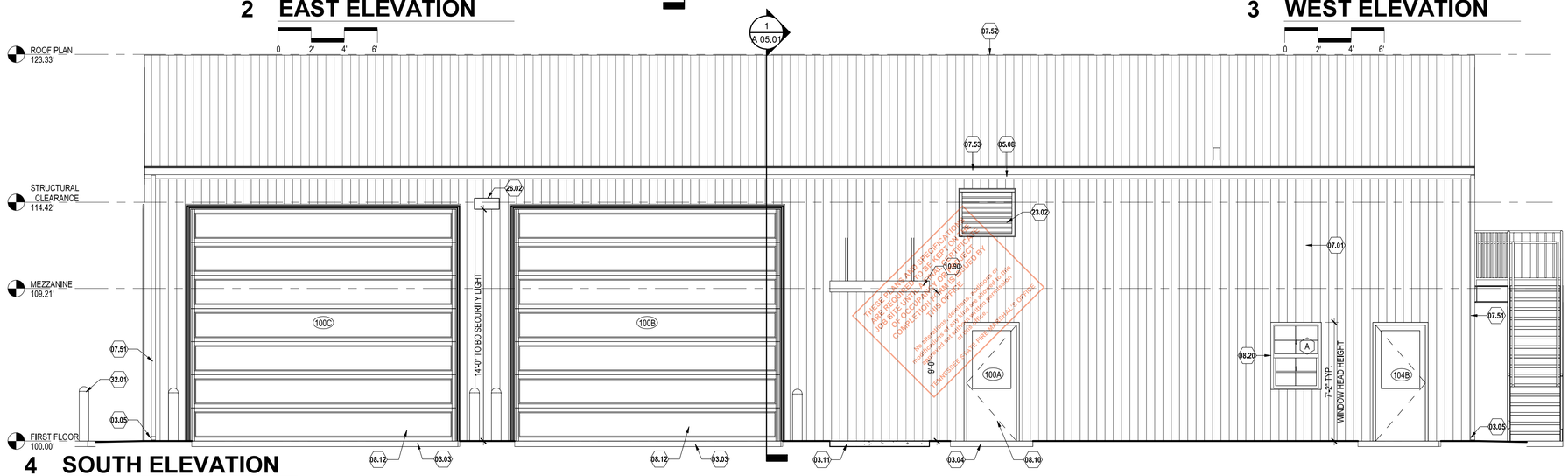

4 SOUTH ELEVATION

0 2' 4' 6'

KEYNOTE SCHEDULE

DENOTED BY A NUMBER ENCLOSED INSIDE A HEXAGON. ONLY NOTES APPLICABLE TO THIS SHEET ARE SHOWN.

03.03	4'-0" D CONCRETE APRON; REF CIVIL
03.04	5'-0" x 5'-0" CONCRETE STOOP; REF CIVIL
03.05	PROVIDE PRECAST CONC. SPASH BLOCK, TYP.
03.11	6'-0" x 6'-0" CONCRETE STOOP; REF CIVIL
05.08	PREFINISHED METAL TRIM - TYP.
07.01	PRE-ENGINEERED BUILDING MANUF, PREFINISHED METAL WALL PANELS
07.50	PRE-ENGINEERED BUILDING MANUF. METAL ROOF PANEL
07.51	PRE-ENGINEERED BUILDING MANUF. DOWNSPOUT (DS)
07.52	RIDGE VENT
07.53	PRE-ENGINEERED BUILDING MANUF. GUTTER
08.10	EXTERIOR GALVANIZED H.M. DOOR AND FRAME; REF SCHEDULE
08.12	PREFINISHED METAL OVERHEAD SECTIONAL DOOR W/ MOTOR OPERATOR
08.20	SINGLE-HUNG WINDOW, TYP.; REF SCHEDULE
10.90	PRE-ENGINEERED CANOPY, WITH FINISH TO MATCH WINDOWS. SUSPEND CANOPY BACK TO FRAMING AND SECURE. CANOPY BY METAL BUILDING MANUFACTUER, REF. SPECS
23.01	THRU WALL HVAC UNIT, REF MECH.
23.02	EXHAUST FAN; REF MECH.
23.03	PRE-FINISHED METAL LOUVER WITH BIRD AND INSECT SCREEN; REF MECH.
26.02	SECURITY LIGHT; REF ELECTRICAL
32.01	4" DIAMETER CONC. FILLED STEEL BOLLARDS, TYP.

PROJECT NO. 39999-3609-04
PIN NO. 131121.00

REVISIONS

DESCRIPTION	BY	DATE

TDOT HENDERSON COUNTY MAINTENANCE BUILDING

370 ROCK MILAM ROAD,
CEDAR GROVE TN, 38321

DATE AUGUST 18,2023

PHASE CONSTRUCTION

Wold HFR DESIGN
214 Centerview Drive Suite 300
Brentwood, TN 37027
woldae.com phone: 615.370.8500
fax: 615.370.8530

SSR Smith Seckman Reid, Inc.
2650 Thousand Oaks Boulevard,
Suite 3200
Memphis, TN 38118
(901) 683-3900
FAX: (901) 683-3990
www.ssr-inc.com

SEALED BY

RONALD K. FRANKS
REGISTERED ARCHITECT
No. 20949
STATE OF TENNESSEE
8/18/23

STATE OF TENNESSEE
DEPARTMENT OF
TRANSPORTATION

BUILDING ELEVATIONS

A 04.01

SHEET 10 OF 34

FIELD SET TFM# 21349 PROJECT# 2024-04-17-10

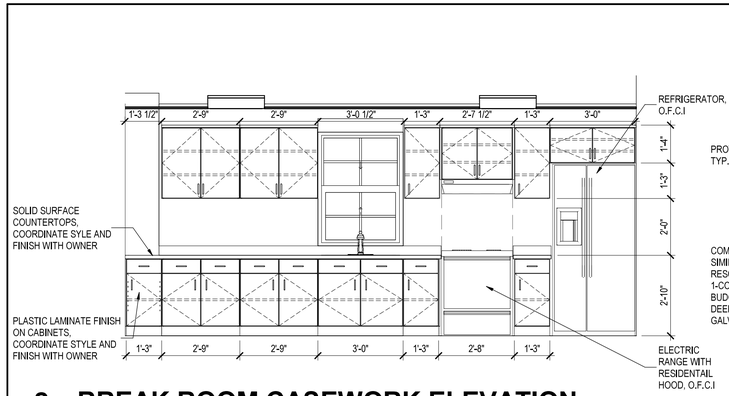

2 BREAK ROOM CASEWORK ELEVATION

0 6" 1' 2' 3'

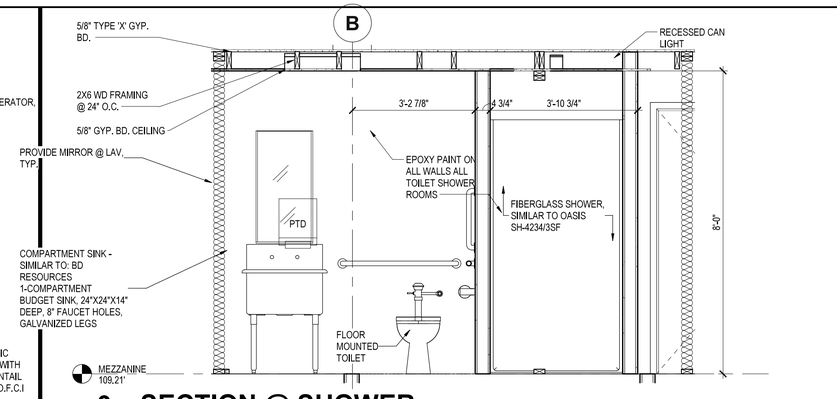

3 SECTION @ SHOWER

0 6" 1' 2' 3'

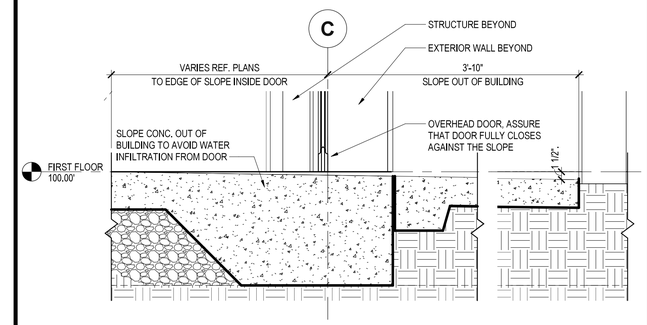

4 DETAIL AT FLOOR SLOPE

0 3" 6" 1' 2'

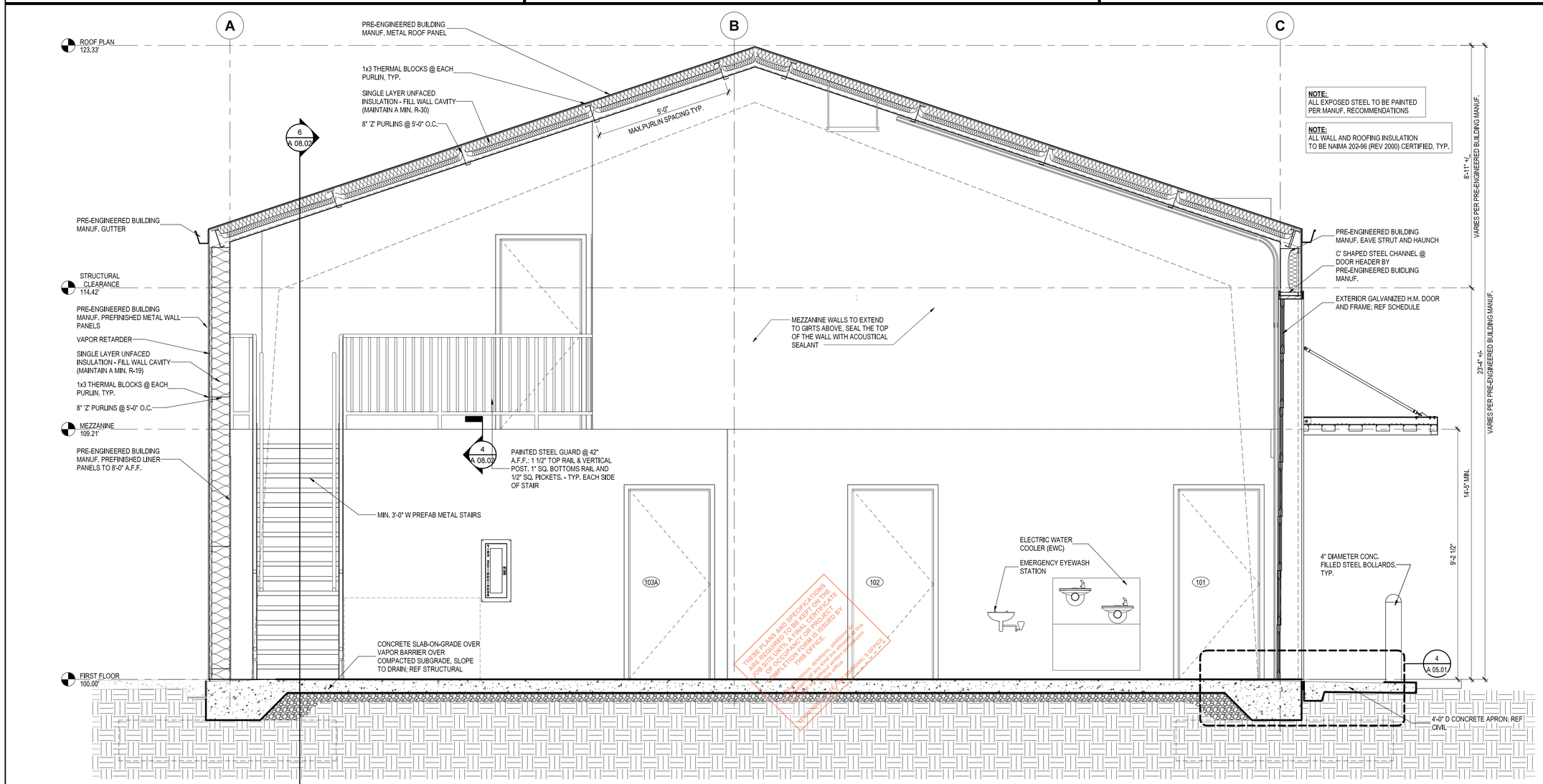

THESE PLANS AND SPECIFICATIONS ARE REQUIRED TO BE KEPT ON THE JOB SITE UNTIL A FINAL CERTIFICATE OF OCCUPANCY FOR PROJECT IS COMPLETED FOR A FORM 1 ISSUED BY THIS OFFICE.
TENNESSEE DEPARTMENT OF TRANSPORTATION BUILDING OFFICIAL
Only the name, signature, seal/stamp, or initials of a person authorized to do so may be affixed to this document. Any alteration, addition, or deletion to this document by any other person without written permission is prohibited.

1 BUILDING SECTION

REF: 1 / A 01.01

0 6" 1' 2' 3'

PROJECT NO.	39999-3609-04
PIN NO.	131121.00

REVISIONS

DESCRIPTION	BY	DATE

TDOT HENDERSON COUNTY MAINTENANCE BUILDING

370 ROCK MILAM ROAD,
CEDAR GROVE TN, 38321

PHASE: CONSTRUCTION

DATE: AUGUST 18,2023

Wold HFR DESIGN
214 Centerview Drive Suite 300
Brentwood, TN 37027
woldae.com phone: 615.370.8500
fax: 615.370.8530

SSR Smith Seckman Reid, Inc.
2650 Thousand Oaks Boulevard,
Suite 3200
Memphis, TN 38118
(901) 683-3900
FAX: (901) 683-3990
www.ssr-inc.com

SEALED BY

STATE OF TENNESSEE
DEPARTMENT OF
TRANSPORTATION

BUILDING SECTION

A 05.01

SHEET 11 OF 34

FIELD SET TFM# 21349 PROJECT# 2024-04-17-10

SECTION

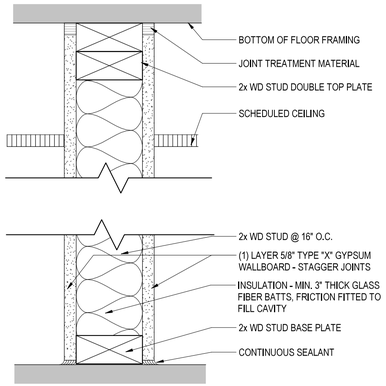

GENERAL NOTES: 1. ALL REQUIREMENTS OF LISTED UL DESIGN # MUST BE MET.	**FIRE RATING:**	-
	UL DESIGN #:	-
	GA FILE #:	-
ABOVE CEILING ID (STENCIL):	**STC RATING:**	-
	OPENINGS:	-
	DAMPERS:	-
LIFE SAFETY PLAN DESIGNATION:	**WALL PRIORITY:**	

NON RATED PARTITION

INTERIOR WALL TYPES

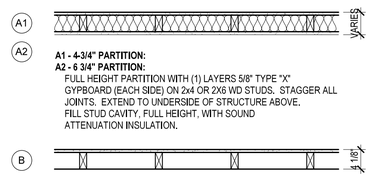

A1 - 4-3/4" PARTITION:
A2 - 6 3/4" PARTITION:
FULL HEIGHT PARTITION WITH (1) LAYERS 5/8" TYPE "X" GYPBOARD (EACH SIDE) ON 2x4 OR 2X6 WD STUDS. STAGGER ALL JOINTS. EXTEND TO UNDERSIDE OF STRUCTURE ABOVE. FILL STUD CAVITY, FULL HEIGHT, WITH SOUND ATTENUATION INSULATION.

4-1/8" PARTITION:

FULL HEIGHT PARTITION WITH (1) LAYERS 5/8" TYPE "X" GYPBOARD (ONE SIDE) ON 2x4 WD STUDS. STAGGER ALL JOINTS. EXTEND TO UNDERSIDE OF STRUCTURE ABOVE.

EXTERIOR WALL TYPES

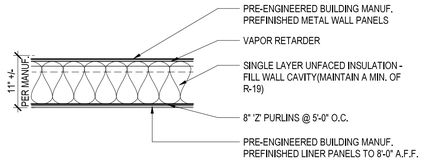

KEYNOTE SCHEDULE

DENOTED BY A NUMBER ENCLOSED INSIDE A HEXAGON. ONLY NOTES APPLICABLE TO THIS SHEET ARE SHOWN.

08.13 2'x2' ACCESS PANEL
08.14 1'X1' ACCESS PANEL
10.01 PROVIDE MIRROR @ LAV, TYP.
10.02 FIBERGLASS SHOWER, SIMILAR TO OASIS SH-4234/3SF
12.80 LOCKER ROOM BENCH, OFOI
22.01 FLOOR MOUNTED TOILET
22.03 EMERGENCY EYEWASH STATION
22.04 ELECTRIC WATER COOLER (EWC)
22.06 URINAL
22.07 COMPARTMENT SINK - SIMILAR TO: BD RESOURCES 1-COMPARTMENT BUDGET SINK, 24"X24"X14" DEEP, 8" FAUCET HOLES, GALVANIZED LEGS
22.10 WALL HUNG ADA COMPARTMENT SINK - JUST MANUFACTURING - JH-ADA-3020-S-CP - PROVIDE BLOCKING
26.01 PROVIDE SCONCE LIGHT @ LAV, TYP.

CEILING MATERIAL LEGEND:

GYPSUM BOARD
EXPOSED STRUCTURE

CEILING FIXTURES LEGEND:

- 2x4 LIGHT FIXTURE - RECESSED, SUSPENDED OR SURFACE MOUNTED
- 2x2 LIGHT FIXTURE - RECESSED, SUSPENDED OR SURFACE MOUNTED
- 1x4 LIGHT FIXTURE - RECESSED, SUSPENDED OR SURFACE MOUNTED
- LINEAR LIGHTING
- SUPPLY GRILLE
- RETURN GRILLE
- EXHAUST GRILLE
- ACCESS PANEL
- DOWNLIGHT
- DOWNLIGHT RECESSED
- EXIT LIGHT SINGLE FACE
- EXIT LIGHT DOUBLE FACE
- WALL MOUNTED LIGHT FIXTURE
- SMOKE DETECTOR
- SPEAKER
- HIGH BAY LIGHT FIXTURE

GENERAL WALL NOTES

REFERENCE WALL TYPE DETAILS, PLANS, AND SPECIFICATIONS.

1. ALL WALLS SHALL BE 3-1/2" WOOD STUDS
2. GYPBOARD REQUIREMENTS:
   - ALL GYPBOARD SHALL BE 5/8" TYPE 'X' U.N.O.
   - PROVIDE FIRE RATED GLASS FIBER FACED GYPSUM PANELS ON INTERIOR SURFACE OF EXTERIOR WALLS, TOILET ROOMS, JANITOR'S CLOSETS, MECHANICAL SPACES, AND WITHIN 4'-0" OF WATER SOURCES.
   - PROVIDE FIRE RATED IMPACT RESISTANT GYPBOARD 4'-0"H AT SERVICE AREA SIDE OF WALL. (IMPACT RESISTANT GYPBOARD SHALL TAKE PRIORITY AT LOCATIONS INDICATED TO RECEIVE GLASS FIBER FACED GYPSUM PANELS.)
3. ALL FRAMING SHALL BE 20 GA U.N.O.
4. STAGGER JOINTS ON OPPOSITE SIDES OF PARTITIONS.
5. PROVIDE ACOUSTICAL INSULATION FULL HEIGHT IN ALL WALLS U.N.O.
6. INSTALL ACOUSTICAL GASKETS AT FLOOR AND CEILING TRACK LOCATIONS.
7. EXTEND ALL WALL CONSTRUCTION TO THE DECK ABOVE AND SEAL U.N.O.
8. DO NOT TRANSFER DEFLECTION FROM STRUCTURAL BUILDING MEMBERS TO STUDS. CONTRACTOR'S OPTION, PROVIDE EITHER OF THE FOLLOWING:
   - MAINTAIN CLEARANCE UNDER STRUCTURAL BUILDING MEMBERS TO AVOID DEFLECTION TRANSFER TO STUDS. PROVIDE EXTENDED LEG CEILING RUNNERS.
   - PROVIDE DEFLECTION AND BRIDGING CLIPS.
9. GYPBOARD PANELS SHALL BE PLACED A MINIMUM OF 1/4" ABOVE FLOOR AND SHALL BE CUT WITHIN 1/4" MAX TOLERANCE TO SHAPE OF DECK OR STRUCTURE ABOVE. GAPS BETWEEN PANELS SHALL BE <1/4".
10. PENETRATIONS IN WALLS SHALL BE SEALED AS REQUIRED BY THE WALL RATING PER AN APPROVED UL DESIGN.

GENERAL CEILING NOTES

CEILINGS ARE DIRECT APPLIED TO UNDERSIDE OF MEZZANINE FLOOR FRAMING (8'-2" TYP.)

ALL WORK

1. COORDINATE ABOVE CEILING DUCTWORK, PIPES, ETC. TO MEET CEILING HEIGHTS AS SHOWN ON DRAWINGS.
2. SAFETY WIRES FOR LIGHTING, MPE, AND OTHER ITEMS:
   - FOR LIGHT FIXTURES, MECHANICAL ITEMS AND ATTACHMENTS WITH A COMBINED WEIGHT OF 56 POUNDS OR LESS, PROVIDE POSITIVE ATTACHMENT WITH TWO DEVICES PLUS TWO SLACK WIRES AT DIAGONAL CORNERS.
   - FOR LIGHT FIXTURES AND MECHANICAL ITEMS WITH A COMBINED WEIGHT GREATER THAN 56 POUNDS, ATTACH SEPARATE WIRES (4 MINIMUM) TO INDEPENDENTLY SUPPORT FIXTURES FROM STRUCTURE. DO NOT INSTALL FIXTURES SUCH THAT SUPPORT FOR FIXTURES COMES FROM CEILING GRID.
3. CEILING MATERIALS ARE AS SHOWN. REFER TO SPECIFICATIONS FOR SPECIFICS REGARDING TYPES OF FINISHES.
4. CENTER LIGHT FIXTURES, DEVICES AND SPRINKLER HEADS IN ROOM.
5. CENTER EXIT SIGNS OVER EXIT DOORS (U.N.O.)
6. ACCESS PANELS: PROVIDE ALLOWANCE FOR (2) 24" X 24" ACCESS PANELS IN EACH HARD CEILING LOCATION IN ADDITION TO THOSE SHOWN ON THE DRAWINGS. CREDIT UNUSED ACCESS PANEL MONIES BACK TO OWNER AT PROJECT CLOSEOUT. PROVIDE ACCESS PANELS WHERE REQUIRED FOR TEST VALVES, CONTROLS, AND ABOVE CEILING MAINTENANCE THAT MEET THE RATING OF THE ASSEMBLY IN WHICH THEY ARE INSTALLED.
7. INSTALL CEILINGS IN ALL ROOMS AS SHOWN ON THE REFLECTED CEILING PLAN AND AS INDICATED ON THE FINISH PLAN TO RECEIVE NEW CEILINGS.
8. PAINT INTERIOR SURFACES OF AIR DUCTS AND CONVECTOR / BASEBOARD HEATING CABINETS THAT ARE VISIBLE THROUGH GRILLES AND LOUVERS WITH ONE COAT OF FLAT BLACK PAINT, FOR A MINIMUM OF 1'-0" OR BEYOND SIGHT LINE, WHICHEVER IS GREATER. PAINT DAMPERS EXPOSED IMMEDIATELY BEHIND LOUVERS, GRILLES AND CONVECTOR AND BASEBOARD CABINETS TO MATCH FACE PANELS.

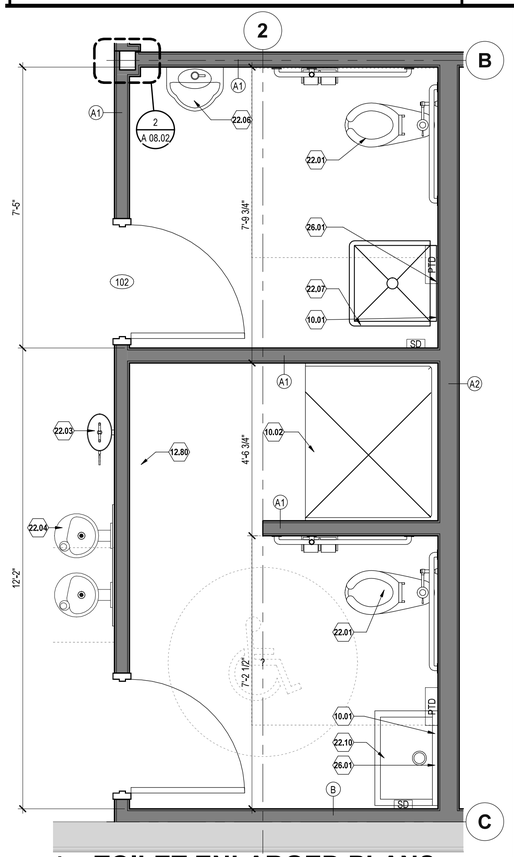

1 TOILET ENLARGED PLANS

0 6" 1' 2' 3'

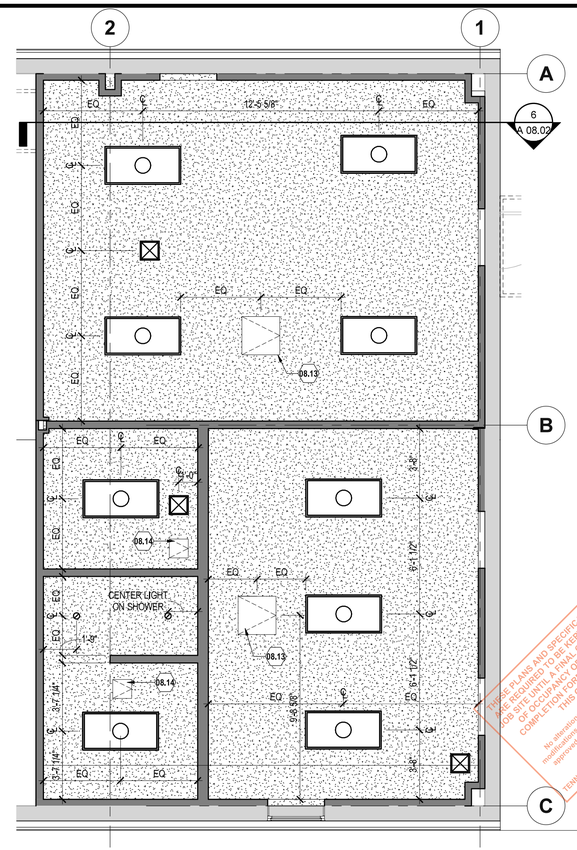

2 FIRST FLOOR PARTIAL RCP

0 2' 4' 6'

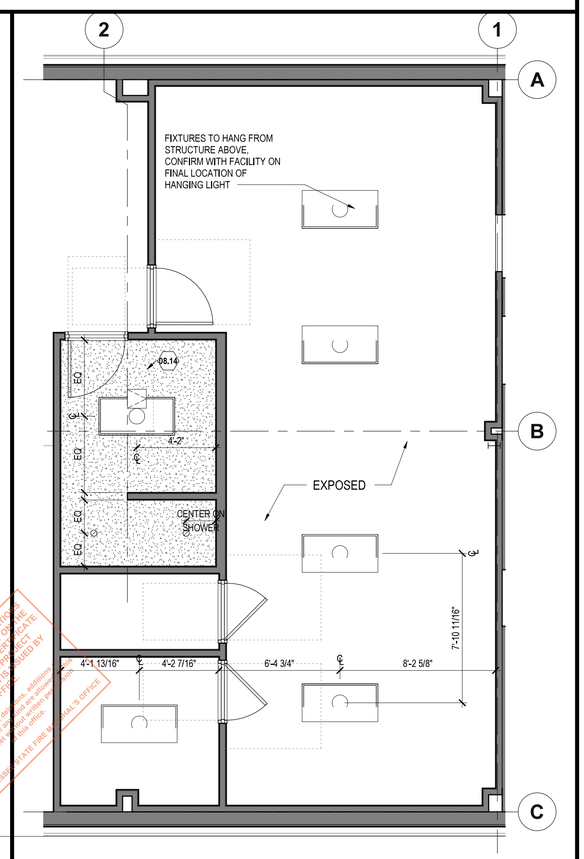

4 MEZZANINE CEILING

0 2' 4' 6'

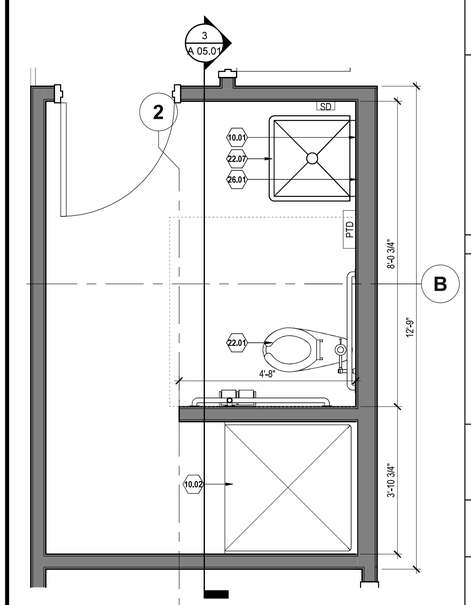

3 MEZZ. RESTROOM/SHOWER

0 6" 1' 2' 3'

PROJECT NO.	39999-3609-04
PIN NO.	131121.00

REVISIONS

DESCRIPTION	BY	DATE

TDOT HENDERSON COUNTY MAINTENANCE BUILDING
370 ROCK MILAM ROAD, CEDAR GROVE TN, 38321

PHASE: CONSTRUCTION
DATE: AUGUST 18,2023

Wold HFR DESIGN
214 Centerview Drive Suite 300
Brentwood, TN 37027
woldae.com phone: 615.370.8500
fax: 615.370.8530

SSR Smith Seckman Reid, Inc.
2650 Thousand Oaks Boulevard, Suite 3200
Memphis, TN 38118
(901) 683-3900
FAX: (901) 683-3990
www.ssr-inc.com

SEALED BY

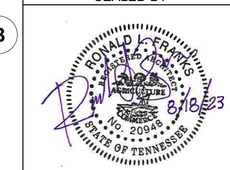

STATE OF TENNESSEE
DEPARTMENT OF TRANSPORTATION

MISC. DETAILS

A 08.01

SHEET12OF 34

FIELD SET TFM# 21349 PROJECT# 2024-04-17-10

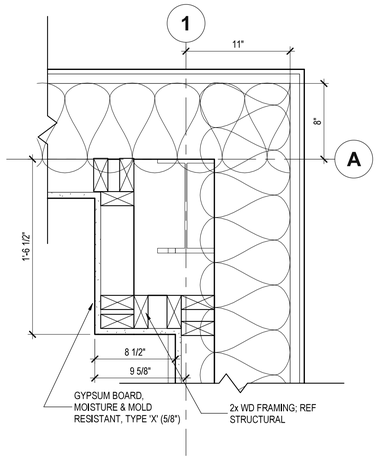

1 PLAN DETAIL @ COLUMN A-1

REF: 1 / A 01.03

0 2" 4" 6" 1'

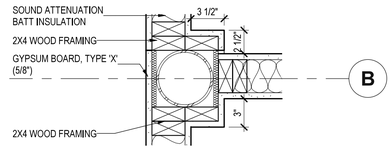

2 DETAIL @ COLUMN B-1

REF: 1 / A 08.01

0 6" 1' 2' 3'

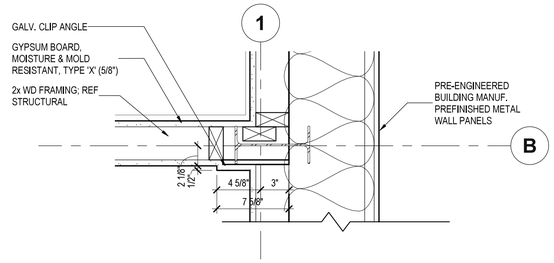

3 PLAN DETAIL @ COLUMN B-2

REF: 1 / A 01.03

0 2" 4" 6" 1'

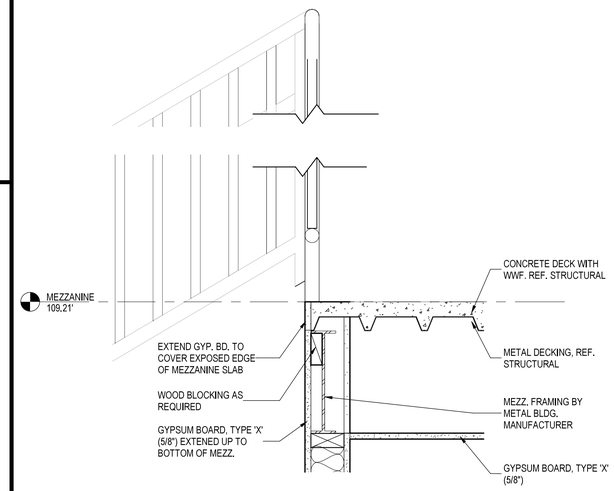

4 DETAIL @ MEZZANINE GUARD

REF: 2 / A 01.03

0 6" 1' 2' 3'

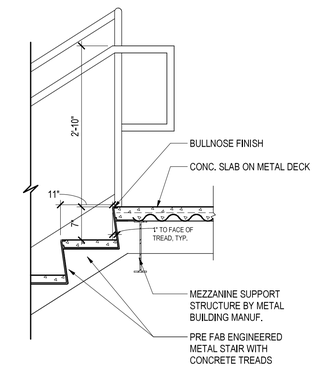

5 DETAIL @ TOP (NEAR WALL)

0 4" 8" 1' 2'

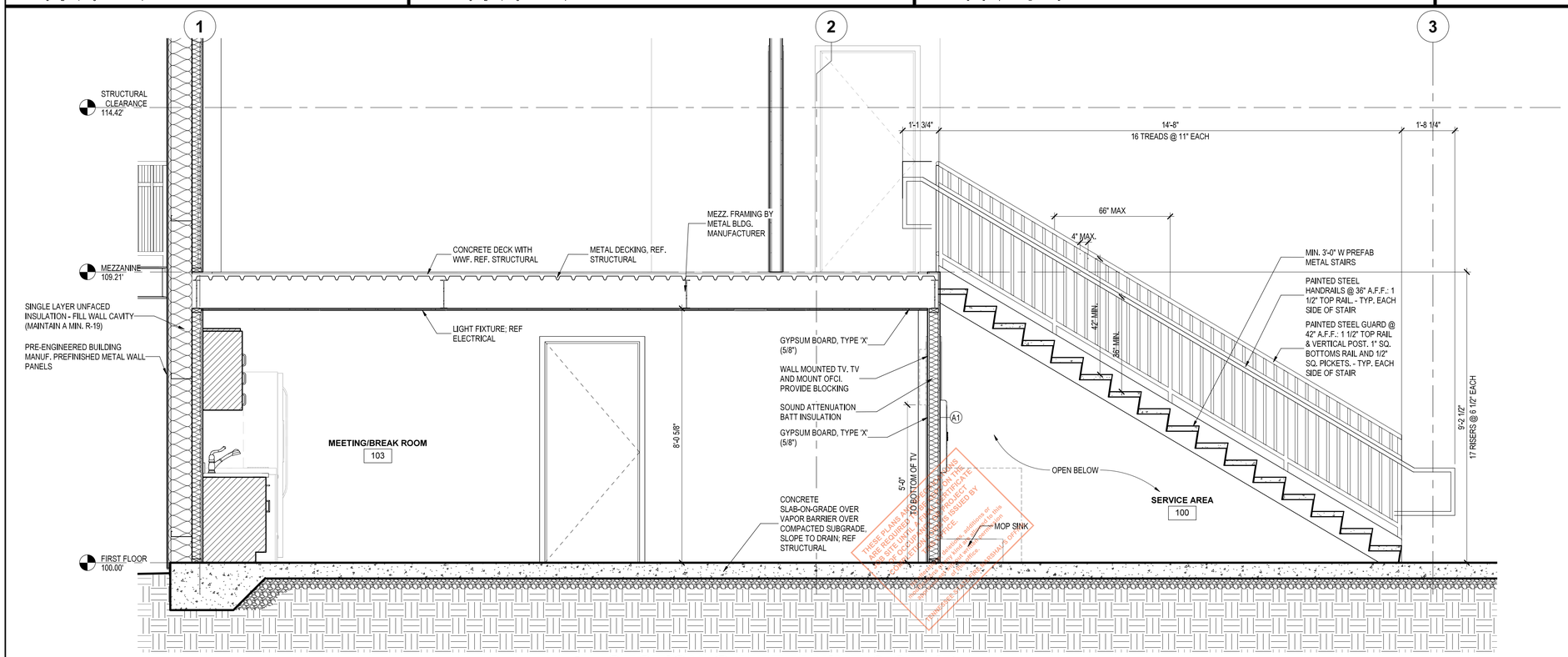

THESE PLANS AND SPECIFICATIONS ARE REQUIRED TO BE ON THE SITE UNDER ACTIVE CONSTRUCTION. ANY ALTERATIONS, additions or deletions to this project without approval of the ARCHITECT OF RECORD, VIOLATES OWNERSHIP RIGHTS.

6 SECTION @ MEZZANINE & STAIR

REF: 1 / A 01.03

0 6" 1' 2' 3'

PROJECT NO.	39999-3609-04
PIN NO.	131121.00

REVISIONS

DESCRIPTION	BY	DATE

TDOT HENDERSON COUNTY MAINTENANCE BUILDING

370 ROCK MILAM ROAD,
CEDAR GROVE TN, 38321

DATE AUGUST 18,2023

PHASE CONSTRUCTION

Wold HFR DESIGN
214 Centerview Drive Suite 300
Brentwood, TN 37027
woldae.com phone: 615.370.8500
fax: 615.370.8530

SSR Smith Seckman Reid, Inc.
2650 Thousand Oaks Boulevard,
Suite 3200
Memphis, TN 38118
(901) 683-3900
FAX: (901) 683-3990
www.ssr-inc.com

SEALED BY

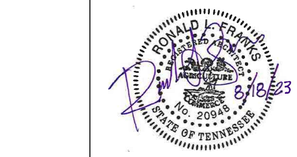

STATE OF TENNESSEE
DEPARTMENT OF
TRANSPORTATION

MISC. DETAILS

A 08.02

SHEET13 OF 34

FIELD SET TFM# 21349 PROJECT# 2024-04-17-10

STRUCTURAL DESIGN CRITERIA

BUILDING CODES:
2012 INTERNATIONAL BUILDING CODE (IBC)

LOADING CRITERIA:
A. APPLIES TO: OFFICE, GARAGE, AND MEZZANINE.

DEAD LOADS:

MEZZANINE COLLATERAL LOAD:	18	PSF	(MPE/CEILING ALLOWANCE)

LIVE LOADS:
A. REDUCIBLE PER IBC: 2012

ROOFS AND CANOPIES:	20	PSF	
FLOORS:			
FIRST FLOOR GARAGE:	32	KIP	(PER AXLE)
FIRST FLOOR COMMON AREAS:	100	PSF	
FIRST FLOOR OFFICE MEETING ROOMS:	50	PSF	
MEZZANINES:	60	PSF	

WIND LOADS:
A. PER ASCE: 7-10

BASIC WIND SPEED (VULT):	115 MPH
BASIC WIND SPEED (VASD):	89 MPH
RISK CATEGORY:	II
WIND EXPOSURE CATEGORY:	C
MAIN WIND FORCE RESISTING SYSTEM (MWFRS):	PER PEMB MANUFACTURER
COMPONENTS AND CLADDING PRESSURES:	REFER TO PEMB MANUFACTURER

SNOW LOADS:

GROUND SNOW LOAD (Pg):	10 PSF
FLAT ROOF SNOW LOAD:	7 PSF
EXPOSURE FACTOR (Ce):	0.9
IMPORTANCE FACTOR (Is):	1.0
THERMAL FACTOR (Ct):	1.0

SEISMIC DESIGN CRITERIA:

IMPORTANCE FACTOR (Is):	1.0
RISK CATEGORY:	II
SITE CLASSIFICATION:	D
SEISMIC DESIGN CATEGORY:	D
MAPPED SPECTRAL RESPONSE ACCELERATION:	
Ss:	0.731
S1:	0.266
MAPPED SPECTRAL DESIGN ACCELERATION:	
SDS:	0.592
SD1	0.331
BASIC SEISMIC FORCE RESISTING SYSTEM:	PER PEMB MANUFACTURER
RESPONSE MODIFICATION COEFFICIENT (R):	PER PEMB MANUFACTURER
DEFLECTION AMPLIFICATION FACTOR (Cd):	PER PEMB MANUFACTURER
OVER STRENGTH (W):	PER PEMB MANUFACTURER
SEISMIC RESPONSE COEFFICIENT (Cs):	PER PEMB MANUFACTURER
DESIGN BASE SHEAR (V):	PER PEMB MANUFACTURER
ANALYSIS PROCEDURE:	EQUIVALENT LATERAL FORCE PROCEDURE

MATERIAL STRENGTHS:
CONCRETE:
A. DESIGN PER CURRENT EDITION OF: ACI 318

SLAB-ON-GRADE:	F'c =	4,000 PSI	(MIN.)
FOOTINGS/FOUNDATION WALLS:	F'c =	4,000 PSI	
LIGHT WEIGHT CONCRETE FOR MEZZANINES:	F'c =	4,000 PSI	
ALL OTHER CONCRETE:	F'c =	3,000 PSI	
REINFORCING STEEL:	ASTM A615, GRADE 60		
WELDED WIRE FABRIC:	ASTM A1064		

B. TDOT STANDARD SPECIFICATIONS FOR CONCRETE MIX DESIGN CAN ALSO BE USED AS LONG AS THE COMPRESSIVE STRENGTH SPECIFIED ABOVE IS MAINTAINED.

FOUNDATIONS:
A. FOUNDATION TYPES: SHALLOW FOUNDATIONS CONSISTING OF SPREAD FOOTINGS.
SOIL BEARING CAPACITIES:
SPREAD FOOTINGS: 1,500 PSF (DESIGN MAXIMUM)

STRUCTURAL SPECIFICATIONS

SITE PREPARATION:
A. FOOTING AND SLAB SUBGRADE PREPARATION SHALL BE IN ACCORDANCE WITH RECOMMENDATIONS OF A LOCAL GEOTECHNICAL ENGINEER AND SHALL BE IN COMPLIANCE WITH APPLICABLE REQUIREMENTS OF GOVERNING AUTHORITIES HAVING JURISDICTION. SPECIAL ATTENTION SHALL BE GIVEN TO RECOMMENDED UNDERCUTTING OF MATERIAL CONTAINING ORGANIC MATERIAL.

GEOTECHNICAL:
A. A GEOTECHNICAL TESTING AND INSPECTION FIRM SHALL BE EMPLOYED TO PERFORM A SOIL SURVEY FOR SATISFACTORY SOIL MATERIALS, SAMPLING AND TESTING FOR QUALITY CONTROL. ALL EARTHWORK OPERATIONS SHALL BE PERFORMED TO THE SATISFACTION OF THE GEOTECHNICAL TESTING FIRM.

CONCRETE:
A. CONCRETE CONSTRUCTION SHALL BE IN ACCORDANCE WITH "SPECIFICATIONS FOR STRUCTURAL CONCRETE FOR BUILDINGS", (ACI 301).

B. CONCRETE SHALL BE PROPORTIONED, BATCHED, MIXED, PLACED, CONSOLIDATED, AND CURED IN ACCORDANCE WITH ACI 301,304,308,309 AND 318.

C. ALL CONCRETE MIXES SHALL BE PROPORTIONED BY THE FIELD EXPERIENCE METHOD OR THE LABORATORY TRIAL METHOD IN ACCORDANCE W/ ACI 318. MAX WATER TO CEMENT RATIO SHALL BE 0.55.

D. PROVIDE COMPRESSIVE STRENGTH TESTS CONFORMING TO ASTM C31 AND ASTM C39. ONE SET OF FOUR CYLINDERS FOR EACH 150 CUBIC YARDS OR FRACTION THEREOF, OF EACH STRENGTH OF CONCRETE PLACED IN ANY ONE DAY. TEST ONE SPECIMEN AT SEVEN DAYS, TEST TWO SPECIMENS AT 28 DAYS AND HOLD ONE IN RESERVE. PERFORM ONE SLUMP TEST FOR EACH SET OF COMPRESSIVE STRENGTH TEST SPECIMENS. SUBMIT RESULTS DIRECTLY TO ENGINEER.

E. TDOT STANDARD SPECIFICATIONS FOR CONCRETE MIX DESIGN CAN ALSO BE USED AS LONG AS THE COMPRESSIVE STRENGTH AND MINIMUMS SPECIFIED ABOVE ARE MAINTAINED.

CONCRETE

GENERAL NOTES:
A. PROVIDE 3/4" CHAMFER AT ALL EXPOSED CORNERS OF BEAMS, WALLS, SLABS, ETC.

B. ALL CONCRETE SHALL BE MECHANICALLY VIBRATED IN ACCORDANCE WITH: ACI 304 AND ACI 309

C. ALL EXTERIOR CONC. PERMANENTLY EXPOSED TO WEATHER SHALL CONTAIN AN AIR ENTRAINING ADMIXTURE.

D. LIGHT WEIGHT CONCRETE SHALL HAVE A MAXIMUM WEIGHT OF 110 PCF.

E. CONTRACTOR SHALL USE CAUTION TO PREVENT POP-OUTS WHILE FINISHING LIGHT WEIGHT CONCRETE WITH AIR ENTRAINMENT > 3%.

F. CONTRACTOR SHALL REFER TO AND COORDINATE WITH OTHER DISCIPLINES DRAWINGS AND OR VENDOR DRAWINGS FOR EMBEDDED ITEMS AND OR RECESSES NOT SHOWN IN THE STRUCTURAL DRAWINGS.

REINFORCING:
A. UNLESS NOTED OTHERWISE (U.N.O.) ON THE DWGS, THE MIN. COVER FOR REINFORCING SHALL BE AS FOLLOWS:

SLABS, WALLS, AND JOISTS:			
FOOTINGS:	3.00	INCHES	
COLUMNS/BEAMS:	1.50	INCHES	
SLABS ON GRADE:	2.00	INCHES	(FROM TOP)
ELEVATED SLABS:	1.00	INCHES	(FROM TOP)

B. ALL REINFORCING SHALL BE HELD SECURELY IN POSITION WITH STANDARD ACCESSORIES IN CONFORMANCE WITH THE FOLLOWING DURING THE PLACING OF CONCRETE:

CRSI MANUAL OF STANDARD PRACTICE
ACI 315

C. ALL REINFORCING SHALL BE DETAILED IN ACCORDANCE WITH THE FOLLOWING:

ACI DETAILING MANUAL, SP-66
THE CRSI MANUAL OF CONCRETE PRACTICE
ACI 318

D. PROVIDE BAR SUPPORTS AND SPACERS IN ACCORDANCE WITH THE FOLLOWING:

CRSI MANUAL OF STANDARD PRACTICE
ACI 315

E. ALL BAR SUPPORTS IN AREA WHERE CONCRETE WILL BE EXPOSED SHALL HAVE PLASTIC TIPPED FEET. THE CONTRACTOR IS CAUTIONED THAT CARE MUST BE EXERCISED TO PREVENT EXPOSURE OF THE TIE WIRE OR OTHER MATERIAL WHICH MAY CAUSE STAINING OF EXPOSED CONCRETE. PROPER COVER AS INDICATED ABOVE SHALL BE MAINTAINED ON ALL REINFORCEMENT.

F. ALL HOOKS IN REINFORCING BARS SHALL BE ACI STANDARD HOOKS, U.N.O.

G. DOWELS FROM FOUND. OR SLABS TO WALLS SHALL MATCH WALL REINFORCING, UNLESS NOTED OTHERWISE. DOWELS SHALL BE PLACED BEFORE CONC. IS POURED. DOWELS SHALL NOT BE PUSHED INTO THE CONCRETE.

H. WHERE GRADE BEAMS OR STRIP FOOTINGS INTERSECT COLUMNS FOUNDATIONS, EXTEND GRADE BEAM OR STRIP FOOTING REINFORCEMENT CONTINUOUSLY THROUGH THE COLUMN FOUNDATION.

I. WELDED WIRE FABRIC SHALL BE LAPPED A MINIMUM OF WIRE SPACING PLUS 6" AND TIED.

J. WELDED WIRE FABRIC SHALL BE FABRICATED IN FLAT SHEETS. ROLLS ARE NOT ALLOWED.

K. UNLESS NOTED OTHERWISE, TENSION SPLICES IN REINFORCING, WHERE PERMITTED, SHALL BE: CLASS B

REINFORCING BARS:

	#6 AND SMALLER				#7 AND LARGER			
F'c	OTHER BARS		TOP BARS		OTHER BARS		TOP BARS	
	CLASS A	CLASS B	Class A	Class B	Class A	Class B	Class A	Class B
3,000 PSI	44 db	57 db	57 db	74 db	55 db	72 db	72 db	93 db
4,000 PSI	38 db	50 db	50 db	65 db	48 db	62 db	62 db	81 db
5,000 PSI	34 db	45 db	45 db	58 db	43 db	56 db	56 db	72 db

NOTES:
1. ALL LAPS SHALL BE CLASS B UNLESS NOTED OTHERWISE (U.N.O.).
2. BEAMS AND COLUMNS: INCREASE LAPS SHOWN BY 50% IF CLEAR SPACING OF BARS IS LESS THAN 2 db, OR IF CLEAR COVER OF BARS IS LESS THAN 1 db.
3. WALLS, SLABS, AND FOOTINGS: INCREASE LAPS SHOWN BY 50% IF CLEAR SPACING OF BARS IS LESS THAN 2 db, OR IF CLEAR COVER OF BARS IS LESS THAN 2 db.
4. INCREASE LAPS BY 25% FOR GRADE 75 REINFORCEMENT.
5. INCREASE LAPS BY 33% FOR LIGHTWEIGHT CONCRETE.

CONTROL JOINTS:
A. SAWN CONTROL JOINTS IN SLAB ON GRADE SHALL BE CUT IN ACCORDANCE WITH: ACI 302.1R

B. JOINTS SHALL BE CUT WITHIN 12 HOURS OF SLAB PLACEMENT.

C. CONTROL JOINTS ARE DIAGRAMMATICALLY SHOWN ON THE PLANS. THE CONTRACTOR MAY ADJUST THE SPACING OF THE JOINTS AND SUBMIT A REVISED SLAB CONTROL JOINT PLAN TO THE ENGINEER FOR APPROVAL. THE LENGTH TO WIDTH RATIO BETWEEN JOINTS SHALL NOT EXCEED 1.5 AND THE AREA BOUNDED BY THE JOINTS SHALL NOT EXCEED 200SF FOR 4" SLABS AND 400SF FOR 6" SLABS.

CONCRETE SLABS:
A. ALL CONCRETE SLABS-ON-GRADE SHALL BE CURED USING A LIQUID MEMBRANE FORMING CURING COMPOUND WHERE PRACTICAL. REFER TO THE SPECIFICATIONS FOR FURTHER INFORMATION.

B. SLAB-ON-GRADE VAPOR BARRIERS SHALL BE A MINIMUM OF 15 MILS THICK. OVERLAP SEAMS 6" AND TAPE.

C. PROVIDE TWO (2) #4 x 3'-0" LONG DIAGONAL BARS, SPACED 6" O.C AT 2" BELOW FINISHED FLOOR AT ALL RE-ENTRANT CORNERS IN SLABS. EXTEND REINFORCEMENT PAST RE-ENTRANT CORNERS A MINIMUM OF 12".

D. PLUMBING, MECHANICAL, AND ELECTRICAL CONTRACTORS SHALL SUBMIT SIZES AND LOCATIONS OF ALL PENETRATIONS THROUGH ELEVATED STRUCTURAL SLABS FOR THE STRUCTURAL ENGINEERS APPROVAL PRIOR TO PLACEMENT OF THE SLAB. NO OPENINGS OR PENETRATIONS SHALL BE ADJACENT TO A COLUMN OR WITHIN A DISTANCE EQUAL TO THE THICKNESS OF THE SLAB FROM THE FACE OF THE COLUMN UNLESS APPROVED BY THE STRUCTURAL ENGINEER.

E. ALL PIPE PENETRATIONS THROUGH ELEVATED CONCRETE SLABS SHALL BE SLEEVED PER: ACI 318

F. ANY CONDUIT AND/OR PIPE RUNNING IN A SLAB OR WALL SHALL BE SPACED NOT LESS THAN 3 DIAMETERS AND SHALL NOT BE LARGER THAN 1/3 THE SLAB THICKNESS.

G. PROVIDE 1/2" PRE-MOLDED EXPANSION JOINT MATERIAL WITH FLEXIBLE JOINT SEALANT WHERE SLAB ON GRADE IS POURED AROUND COLUMNS AND AGAINST GRADE BEAMS OR WALLS, UNLESS OTHERWISE SHOWN OR NOTED.

H. FOR FLATNESS AND LEVELNESS, CONCRETE SLABS SHALL CONFORM TO: ACI 117-90
ACCORDING TO: ASTM E 1155

	COMPOSITE FLATNESS (FF)	COMPOSITE LEVELNESS (FL)
SPECIFIED OVERALL VALUE:	25	20
MINIMUM LOCAL VALUE:	17	15

THESE PLANS AND SPECIFICATIONS MAY BE ACCEPTED FOR USE ONLY IF ACCEPTED BY THE STATE ARCHITECT OF THIS OFFICE.
No alterations, additions, or deletions to these plans and specifications are approved or allowed without written permission of this office.
TENNESSEE STATE FIRE MARSHAL'S OFFICE

SHALLOW FOUNDATIONS

GENERAL NOTES:
A. FINISHED FLOOR ELEVATION SHALL BE TAKEN AS 0'-0", REFER TO CIVIL DRAWINGS FOR ACTUAL ELEVATION.

B. SEE PLUMBING, ELECTRICAL, AND CIVIL DWGS. FOR REQUIRED UTILITIES UNDER FLOOR SLABS AND FOUNDATIONS.

C. BACKFILL FOR FOUNDATIONS, BASEMENT OR RETAINING WALLS SHALL BE SAND OR #57 UNIFORMLY GRADED.

D. FOOTINGS SHALL NOT BE POURED AGAINST SUB-GRADE CONTAINING ICE, STANDING WATER, OR LOOSE MATERIAL.

E. FOOTINGS SHALL BE CENTERED ON COLUMN LINES, AND CENTERLINES OF WALLS (U.N.O.).

SLAB-ON-GRADE:
A. SLAB-ON-GRADE SHALL BEAR PROPERLY AGAINST 15 MIL VAPOR BARRIER OVER 6" COMPACTED GRANULAR DRAINAGE LAYER. DRAINAGE LAYER SHALL BE UNIFORMLY GRADED GRANULAR MATERIAL EQUIVALENT TO #57 STONE.

B. TDOT STANDARD SPECIFICATIONS FOR SUBGRADE AND COMPACTION REQUIREMENTS CAN ALSO BE USED AS LONG AS A SOIL BEARING CAPACITY OF 1500 PSF IS MAINTAINED.

DESIGN INFORMATION:
A. A SITE SPECIFIC SOILS EXPLORATION REPORT WAS NOT PERFORMED FOR THIS PROJECT THAN ALL FOUNDATIONS ARE DESIGNED BASED ON AN ALLOWABLE BEARING CAPACITY OF 1500 PSF. THE ALLOWABLE BEARING PRESSURES ARE BASED ON BEARING AGAINST FIRM, NON-EXPANSIVE, UNDISTURBED SOIL. WHERE UNACCEPTABLE MATERIAL OCCURS, EXCAVATE AND REPLACE WITH ENGINEERED FILL AS DIRECTED BY A LOCAL GEOTECHNICAL ENGINEER.

B. FOUNDATIONS SHALL BEAR ON UNDISTURBED EARTH OR COMPACT FILL. REFER TO SPECIFICATIONS FOR COMPACTION REQUIREMENTS OF FILL MATERIAL.

C. TDOT STANDARD SPECIFICATIONS FOR SUBGRADE AND COMPACTION REQUIREMENTS CAN ALSO BE USED AS LONG AS A SOIL BEARING CAPACITY OF 1500 PSF IS MAINTAINED.

INSPECTIONS:
A. ALL FOUNDATIONS SHALL BE INSPECTED BY A LOCAL GEOTECHNICAL ENGINEER PRIOR TO PLACEMENT TO CONFIRM THE BEARING PRESSURES LISTED ABOVE. IF FOUNDATION EXCAVATIONS OCCUR IN A DISTURBED, UNSUITABLE, OR UNSTABLE SOIL, THE ENGINEER SHALL BE NOTIFIED.

METAL DECKING

GENERAL NOTES:
A. ALL METAL DECKING SHALL BE INSTALLED WITH A MINIMUM OF TWO SPANS.

B. EACH DECKING PANEL SHALL BE CONNECTED TO SUPPORTING MEMBERS.

C. ADJACENT PANELS SHALL BE INTERCONNECTED WITH SIDE LAP FASTENERS AT EACH SPAN.

D. REFER TO PEMB MANUFACTURER FOR CONNECTION DETAILS.

DESIGN CRITERIA:
A. DESIGN PER CURRENT EDITION OF: SDI
B. DECKING MATERIAL: G60 GALV. ,UNLESS NOTED OTHERWISE (U.N.O.)

METAL FLOOR DECKING

MANUFACTURER:	VULCRAFT (OR APPROVED EQUAL)
PROFILE:	WIDE RIB
TYPE	1.0C
GAGE	20

PRE-ENGINEERED METAL BUILDINGS

A. PRE-ENGINEERED METAL BUILDINGS SHALL BE DESIGNED IN ACCORDANCE WITH THE FOLLOWING:
THE BUILDING CODE REFERENCED IN THE SECTION TITLED "STRUCTURAL DESIGN CRITERIA".

MBMA MANUAL, LATEST EDITION

B. FOUNDATIONS HAVE BEEN DESIGNED FOR "PINNED" PEMB COLUMN BASES. NO MOMENTS ARE TO BE TRANSMITTED TO THE FOUNDATION SYSTEM FROM THE PEMB COLUMNS.

C. FOUNDATIONS HAVE BEEN DESIGNED WITH PRELIMINARY LOADS PROVIDED BY THE PRE-ENGINEERED METAL BUILDING MANUFACTURER. THE CONTRACTOR SHALL NOT EXCAVATE OR SUBMIT FOUNDATION REINFORCING SUBMITTALS UNTIL PEMB FOUNDATION LOADS HAVE BEEN SUBMITTED TO AND FOUNDATION SIZES VERIFIED BY THE STRUCTURAL ENGINEER.

D. THE METAL BUILDING MANUFACTURER SHALL INCLUDE MASS OF EXTERIOR VENEER INTO ACCOUNT FOR SEISMIC LOADING.

E. THE METAL BUILDING MANUFACTURER SHALL ACCOUNT FOR WIND LOADS TRANSMITTED TO THE PEMB STRUCTURE FROM THE EXTERIOR WALLS.

F. ALL ANCHOR BOLTS MUST BE LOCATED BY MEANS OF A TEMPLATE. DO NOT HAND SET ANCHOR BOLTS.

SUPPLEMENTARY NOTES

A. PROVIDE ALL TEMPORARY BRACING, GUYING OR OTHER MEANS TO AVOID EXCESSIVE STRESSES AND TO HOLD STRUCTURAL ELEMENTS IN PLACE DURING CONSTRUCTION. THE STRUCTURE SHOULD NOT BE CONSIDERED STABLE UNTIL ALL STRUCTURAL ELEMENTS HAVE BEEN CONSTRUCTED.

B. THE STRUCTURAL ENGINEER SHALL NOT HAVE CONTROL OR BE RESPONSIBLE FOR CONSTRUCTION MEANS, METHODS, TECHNIQUES, PROCEDURES OR SEQUENCES. FOR THE ACTS OR OMISSIONS OF THE CONTRACTOR, OR ANY OTHER PERSONS PERFORMING THE WORK, OR FOR THE FAILURE OF ANY OF THEM TO CARRY OUT THE WORK IN ACCORDANCE WITH THE CONTRACT DOCUMENTS.

C. VERIFY ALL DIMENSIONS WITH THE ARCHITECTURAL DRAWINGS.

D. SEE THE ARCHITECTURAL, MECHANICAL, ELECTRICAL, AND PLUMBING DRAWINGS FOR EMBEDS, OPENINGS, SLEEVES, ETC. NOT SHOWN ON THE STRUCTURAL DRAWINGS.

E. ALL STRUCTURAL OPENINGS AROUND OR AFFECTED BY MECHANICAL, ELECTRICAL, AND PLUMBING EQUIPMENT SHALL BE VERIFIED WITH EQUIPMENT PURCHASED BEFORE PROCEEDING WITH STRUCTURAL WORK AFFECTED.

F. STRUCTURAL ENGINEER OF RECORD FOR THIS PROJECT IS NOT RESPONSIBLE FOR THE DESIGN OF STEEL STAIRS, HANDRAILS, COLD FORMED METAL FRAMING, OR OTHER SYSTEMS NOT INDICATED ON THE STRUCTURAL DOCUMENTS. REFER TO SPECIFICATIONS FOR THESE ITEMS FOR DEFERRED DESIGN SUBMITTAL REQUIREMENTS.

G. ANY ENGINEERING DESIGN PROVIDED BY OTHERS AND SUBMITTED FOR REVIEW SHALL BEAR THE SEAL OF AN ENGINEER REGISTERED IN THE STATE OF THE PROJECT.

H. GENERAL CONTRACTOR MUST REVIEW AND APPROVE SHOP DRAWINGS PRIOR TO SUBMITTAL TO ARCHITECT/ENGINEER. SUBMITTALS WHICH DO NOT CONTAIN THE CONTRACTORS SHOP DRAWING OR STAMP OR HAVE BEEN MERELY "RUBBER STAMPED" SHALL BE RETURNED WITHOUT REVIEW.

I. DO NOT REPRODUCE STRUCTURAL ENGINEERS' DRAWINGS. ERECTION AND SHOP DRAWINGS WILL NOT BE REVIEWED IF ANY PORTION CONTAINS REPRODUCTIONS OF STRUCTURAL ENGINEERS' DRAWINGS.

J. DO NOT SCALE DRAWINGS. IF DIMENSIONS ARE IN QUESTION, THE CONTRACTOR SHALL BE RESPONSIBLE FOR OBTAINING CLARIFICATION FROM THE ARCHITECT BEFORE CONTINUING WITH CONSTRUCTION.

PROJECT NO.	39999-3609-04
PIN NO.	131121.0

REVISIONS

DESCRIPTION	BY	DATE

TDOT HENDERSON COUNTY MAINTENANCE BUILDING
370 ROCK MILAM ROAD
CEDAR GROVE, TN 38321

PHASE CONSTRUCTION
DATE AUGUST 18, 2023

Wold HFR DESIGN
214 Centerview Drive Suite 300
Brentwood, TN 37027
woldae.com phone: 615.370.8500
fax: 615.370.8530

SSR Smith Seckman Reid, Inc.
2650 Thousand Oaks Boulevard,
Suite 4200
Memphis, TN 38118
(901) 683-3900
FAX: (901) 683-3990
www.ssr-inc.com
SSR Project #: --

SEALED BY

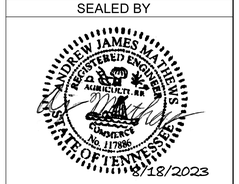

STATE OF TENNESSEE
DEPARTMENT OF
TRANSPORTATION

STRUCTURAL GENERAL NOTES
S0.1

SHEET 14 OF 34

FIELD SET_TFM# 21349 PROJECT# 2024-04-17-10

STATEMENT OF SPECIAL INSPECTIONS

THIS STATEMENT OF SPECIAL INSPECTIONS IS SUBMITTED AS REQUIRED FOR BUILDING PERMIT ISSUANCE IN ACCORDANCE WITH THE SPECIAL INSPECTION AND STRUCTURAL TESTING REQUIREMENTS OF THE INTERNATIONAL BUILDING CODE. THIS STATEMENT OF SPECIAL INSPECTIONS IS ONLY FOR THE STRUCTURAL PORTION OF THE WORK. REFER TO OTHER DISCIPLINES FOR OTHER SPECIAL INSPECTION REQUIREMENTS FOR THIS PROJECT.

THE OWNER OR REGISTERED DESIGN PROFESSIONAL IN CHARGE (ARCHITECT) ACTING AS THE OWNERS AGENT SHALL EMPLOY ONE OR MORE AGENCIES APPROVED BY THE BUILDING OFFICIAL TO PERFORM INSPECTION DURING CONSTRUCTION. THESE INSPECTIONS ARE IN ADDITION TO SECTION 110 OF THE IBC. CONTRACTOR IS RESPONSIBLE TO ENSURE THE INSPECTOR IS PRESENT WHERE WORK REQUIRES PERIODIC OR CONTINUOUS INSPECTION.

RESPONSIBILITIES OF THE SPECIAL INSPECTOR

THE INSPECTOR SHALL KEEP RECORDS OF ALL INSPECTIONS AND SHALL FURNISH INSPECTION REPORTS TO THE BUILDING OFFICIAL, AND THE REGISTERED DESIGN PROFESSIONAL IN RESPONSIBLE CHARGE. DISCOVERED DISCREPANCIES SHALL BE BROUGHT TO THE ATTENTION OF THE CONTRACTOR FOR CORRECTION. IF SUCH DISCREPANCIES ARE NOT CORRECTED, THE DISCREPANCIES SHALL BE BROUGHT TO THE ATTENTION OF THE BUILDING OFFICIAL AND THE REGISTERED DESIGN PROFESSIONAL IN RESPONSIBLE CHARGE. A FINAL REPORT DOCUMENTING ALL THE REQUIRED SPECIAL INSPECTIONS AND TESTING, AND CORRECTION OF ANY DISCREPANCIES NOTED PREVIOUSLY SHALL BE SUBMITTED TO THE BUILDING OFFICIAL PRIOR TO ISSUANCE OF A CERTIFICATE OF USE AND OCCUPANCY.

FABRICATIONS

SPECIAL INSPECTIONS OF THE FABRICATION PROCESS SHALL NOT BE REQUIRED WHERE FABRICATION OF STRUCTURAL LOAD BEARING MEMBERS AND ASSEMBLIES IS BEING PERFORMED ON THE PREMISES OF A FABRICATOR IS REGISTERED AND APPROVED TO PERFORM THE WORK WITHOUT SPECIAL INSPECTIONS. AT THE COMPLETION OF THE FABRICATION, THE APPROVED FABRICATOR SHALL SUBMIT A CERTIFICATE OF COMPLIANCE TO THE BUILDING OFFICIAL.

THE SPECIAL INSPECTIONS ARE IN ADDITION TO THE MATERIAL TESTING AND INSPECTIONS LISTED IN THE CONTRACT SPECIFICATIONS. CONTRACTOR IS TO COORDINATED SPECIAL INSPECTIONS, MATERIAL SPECIFIC TESTING AND INSPECTIONS WITH THE OWNER FURNISHED SPECIAL INSPECTOR MATERIAL TESTING LABS.

THE SPECIAL INSPECTIONS INDICATED HEREIN DO NOT RELIEVE THE CONTRACTOR FROM THEIR RESPONSIBILITIES. CONTRACTOR SHALL PAY FOR ANY ADDITIONAL TESTING OR INSPECTION REQUIRED FROM WORK OR MATERIALS NOT IN CONFORMANCE WITH THE CONTRACT DOCUMENTS.

THE STATEMENT OF SPECIAL INSPECTIONS INCLUDES REQUIRED VERIFICATION AND INSPECTION OF THE FOLLOWING SECTIONS:

1. CONCRETE CONSTRUCTION
2. SOILS

COMPONENTS PART OF THE MAIN WIND FORCE RESISTING SYSTEM AND SUBJECTED TO SPECIAL INSPECTIONS FOR WIND RESISTANCE:

COMPONENTS PART OF THE MAIN SEISMIC FORCE RESISTING SYSTEM AND SUBJECTED TO SPECIAL INSPECTIONS FOR SEISMIC RESISTANCE:

AISC 360-10: SPECIFICATION FOR STRUCTURAL STEEL BUILDINGS

TABLE N5.6-1
INSPECTION TASKS PRIOR TO BOLTING

1. MANUFACTURER'S CERTIFICATIONS AVAILABLE FOR FASTENER MATERIAL	X	-
2. FASTENERS MARKED IN ACCORDANCE WITH ASTM REQUIREMENTS	-	X
3. PROPER FASTENERS SELECTED FOR THE JOINT DETAIL (GRADE, TYPE, BOLT LENGTH IF THREADS ARE TO BE EXCLUDED FROM SHEAR PLANE)	-	X
4. PROPER BOLTING PROCEDURE SELECTED FOR JOINT DETAIL	-	X
5. CONNECTING ELEMENTS, INCLUDING THE APPROPRIATE FAYING SURFACE CONDITION AND HOLE PREPARATION, IF SPECIFIED, MEET APPLICABLE REQUIREMENTS	-	X
6. PRE-INSTALLATION VERIFICATION TESTING BY INSTALLATION PERSONNEL OBSERVED AND DOCUMENTED FOR FASTENER ASSEMBLIES AND METHOD USED	X	X
7. PROPER STORAGE PROVIDED FOR BOLTS, NUTS, WASHERS AND OTHER FASTENER COMPONENTS	-	X
TABLE N5.6-2 INSPECTION TASKS DURING BOLTING		
1. FASTENER ASSEMBLIES, OF SUITABLE CONDITION, PLACED IN ALL HOLES AND WASHERS (IF REQUIRED) ARE POSITIONED AS REQUIRED	-	X
2. JOINT BROUGHT TO THE SNUG-TIGHT CONDITION PRIOR TO THE PRETENSIONING OPERATION	-	X
3. FASTENER COMPONENT NOT TURNED BY THE WRENCH PREVENTED FROM ROTATING	-	X
4. FASTENERS ARE PRETENSIONED IN ACCORDANCE WITH THE RSCS SPECIFICATION, PROGRESSING SYSTEMATICALLY FROM THE MOST RIGID POINT TOWARD THE FREE EDGES	-	X
TABLE N5.6-3 INSPECTION TASKS AFTER BOLTING		
1. DOCUMENT ACCEPTANCE OR REJECTION OF BOLTED CONNECTIONS	X	-

THESE PLANS AND SPECIFICATIONS ARE REQUIRED TO BE KEPT ON THE JOB SITE UNTIL A FINAL CERTIFICATE OF OCCUPANCY OR PROJECT COMPLETION FORM IS ISSUED BY THIS OFFICE.

No alterations, deletions, additions or modifications of any kind are allowed on this approved set without written permission of this office.

TENNESSEE STATE FIRE MARSHAL'S OFFICE

TABLE 1705.3, REQUIRED VERIFICATION AND INSPECTION OF CONCRETE CONSTRUCTION

VERIFICATION AND INSPECTION	CONTINUOUS	PERIODIC	REFERENCED STANDARD	IBC REFERENCE
1. INSPECTION OF REINFORCING STEEL, INCLUDING PRESTRESSING TENDONS, AND PLACEMENT.	---	X	ACI 318: 3.5, 7.1-7.7	1910.4
2. INSPECTION OF REINFORCING STEEL WELDING IN ACCORDANCE WITH TABLE 1705.2.2, ITEM 2B.	---	---	AWS D1.4 ACI 318:3.5.2	---
3. INSPECTION OF ANCHORS CAST IN CONCRETE WHERE ALLOWABLE LOADS HAVE BEEN INCREASED OR WHERE STRENGTH DESIGN IS USED.	---	X	ACI 318:8.1.3, 21.2.8	1908.5, 1909.1
4. INSPECTION OF ANCHORS POST-INSTALLED IN HARDENED CONCRETE MEMBERS	---	X	ACI 318: 3.8.6, 8.1.3, 21.2.8	1909.1
5. VERIFYING USE OF REQUIRED DESIGN MIX	---	X	ACI 318: CH. 4,5.2-5.4	1904.2, 1910.2, 1910.3
6. AT THE TIME OF FRESH CONCRETE IS SAMPLED TO FABRICATE SPECIMENS FOR STRENGTH TESTS, PERFORM SLUMP AND AIR CONTENT TESTS, AND DETERMINE THE TEMPERATURE OF THE CONCRETE.	X	---	ASTM C172 ASTM C31 ACI 318: 5.6, 5.8	1910.10
7. INSPECTION OF CONCRETE AND SHOTCRETE PLACEMENT FOR PROPER APPLICATION TECHNIQUES.	X	---	ACI 318: 5.9, 5.10	1910.6, 1910.7, 1910.8
8. INSPECTION FOR MAINTENANCE OF SPECIFIED CURING TEMPERATURE AND TECHNIQUES.	---	X	ACI 318: 5.11-5.13	1910.9
9. INSPECTION OF PRESTRESSED CONCRETE:				
A. APPLICATION OF PRESTRESSING FORCES.	X	---	ACI 318: 18.20 ACI 318: 18.18.4	---
B. GROUTING OF BONDED PRESTRESSING TENDONS IN THE SEISMIC FORCE-RESISTING SYSTEM.	X			
10. ERECTION OF PRECAST CONCRETE MEMBERS.	---	X	ACI 318: CH. 16	---
11. VERIFICATION OF IN-SITU CONCRETE STRENGTH, PRIOR TO STRESSING OF TENDONS IN POST-TENSIONED CONCRETE AND PRIOR TO REMOVAL OF SHORES AND FORMS FROM BEAMS AND STRUCTURAL SLABS.	---	X	ACI 318: 6.2	---
12. INSPECT FORMWORK FOR SHAPE, LOCATION, AND DIMENSIONS OF THE CONCRETE MEMBER BEING FORMED.	---	X	ACI 318: 6.1.1	---

TABLE 1705.6, REQUIRED VERIFICATION AND INSPECTION OF SOILS

VERIFICATION AND INSPECTION TASK	CONTINUOUS	PERIODIC
1. VERIFY MATERIALS BELOW SHALLOW FOUNDATIONS ARE ADEQUATE TO ACHIEVE THE DESIGN BEARING CAPACITY.	---	X
2. VERIFY EXCAVATIONS ARE EXTENDED TO PROPER DEPTH AND HAVE REACHED PROPER MATERIAL.	---	X
3. PERFORM CLASSIFICATION AND TESTING OF COMPACTED FILL MATERIALS.	---	X
4. VERIFY USE OF PROPER MATERIALS, DENSITIES, AND LIFT THICKNESSES DURING PLACEMENT AND COMPACTION OF COMPACTED FILL.	X	---
5. PRIOR TO PLACEMENT OF COMPACTED FILL, OBSERVE SUBGRADE AND VERIFY THAT SITE HAS BEEN PREPARED PROPERLY.	---	X

TABLE 1705.11, REQUIRED VERIFICATION AND INSPECTION OF SEISMIC RESISTANCE

VERIFICATION AND INSPECTION	CONTINUOUS	PERIODIC	REFERENCED STANDARD	IBC REFERENCE
1. STRUCTURAL STEEL				
SEE AISC 341 AND INSPECTION LIST ATTACHED	X	X	AISC 341	1705.11.1
2. REFER TO MECHANICAL, ELECTRICAL, PLUMBING AND ARCHITECTURAL PLANS FOR FURTHER SPECIAL INSPECTIONS RELATED TO EACH DISCIPLINE.				

PROJECT NO. 39999-3609-04
PIN NO. 131121.0

REVISIONS

DESCRIPTION	BY	DATE

TDOT HENDERSON COUNTY MAINTENANCE BUILDING
370 ROCK MILAM ROAD
CEDAR GROVE, TN 38321

PHASE: CONSTRUCTION
DATE: AUGUST 18, 2023

Wold HFR DESIGN
214 Centerview Drive Suite 300
Brentwood, TN 37027
woldae.com phone: 615.370.8500
fax: 615.370.8530

SSR Smith Seckman Reid, Inc.
2650 Thousand Oaks Boulevard,
Suite 4200
Memphis, TN 38118
(901) 683-3900
FAX: (901) 683-3990
www.ssr-inc.com
SSR Project #: --

SEALED BY

ANDREW JAMES MATHEWS
REGISTERED ENGINEER
AGRICULTURE
No. 117886
STATE OF TENNESSEE
8/18/2023

STATE OF TENNESSEE
DEPARTMENT OF
TRANSPORTATION

SPECIAL INSPECTION NOTES S0.2

SHEET 15 OF 34

FIELD SET TFM# 21349 PROJECT# 2024-04-17-10

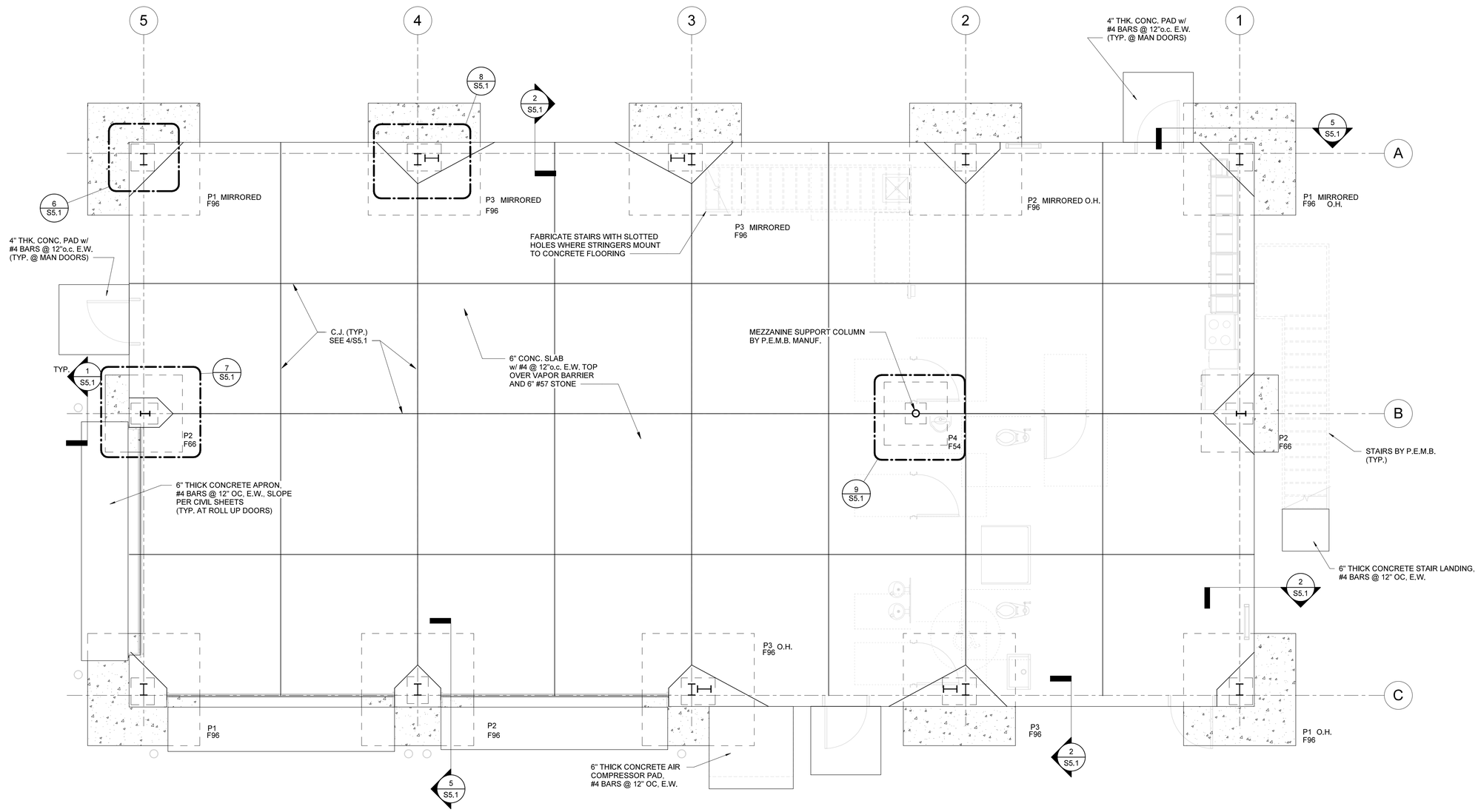

INTERIOR WALL TYPES

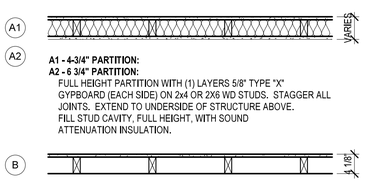

A1 - 4-3/4" PARTITION:
A2 - 6 3/4" PARTITION:
FULL HEIGHT PARTITION WITH (1) LAYERS 5/8" TYPE "X" GYPBOARD (EACH SIDE) ON 2x4 OR 2X6 WD STUDS. STAGGER ALL JOINTS. EXTEND TO UNDERSIDE OF STRUCTURE ABOVE. FILL STUD CAVITY, FULL HEIGHT, WITH SOUND ATTENUATION INSULATION.

4-1/8" PARTITION:

FULL HEIGHT PARTITION WITH (1) LAYERS 5/8" TYPE "X" GYPBOARD (ONE SIDE) ON 2x4 WD STUDS. STAGGER ALL JOINTS. EXTEND TO UNDERSIDE OF STRUCTURE ABOVE.

EXTERIOR WALL TYPES

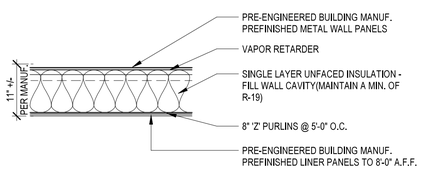

FOUNDATION PLAN

1/4" = 1'-0"

NOTES:
1. SEE CIVIL DWG. FOR F.F.E.
2. SLAB CONTROL JOINTS NOT TO EXCEED AND AREA OF 400 SQ. FEET IN AS SQUARE A PATTERN AS POSSIBLE.
3. SEE GENERAL NOTES FOR INFO NOT SHOWN ON PLAN.
4. SEE ARCH. DWG. FOR DIMENSIONS NOT SHOWN.
5. CONTRACTOR HAS OPTION TO USE W.W.F. 6x6 xW2.9xW2.9 IN LIEU OF #4 BARS IN THE 6" SLAB OF THE OFFICE AREAS ONLY. AREAS SUBJECT TO VEHICLE LOADING SHALL BE REINFORCED AS SHOWN ON PLAN ONLY.

THESE PLANS ARE NOT TO BE USED ON ANY JOB SITE UNTIL A FINAL OR PARTIAL OCCUPANCY OR A CERTIFICATE OF COMPLETION HAS BEEN ISSUED BY THE OFFICE.
No alteration, deletion, additions, or any modification of any kind is to be made without approval and written permission of this office.
TENNESSEE STATE FIRE MARSHAL'S OFFICE

PIER SCHEDULE

REMARKS:
A. TWO (2) SETS OF TIES.
B. THREE (3) SETS OF TIES.
C. SEE DETAILS.

MARK	WIDTH	LENGTH	REINFORCEMENT	REMARKS
P1	1' - 6"	1' - 6"	SEE DETAIL FOR REINF.	SEE DETAIL FOR TIES
P2	1' - 6"	1' - 11"	SEE DETAIL FOR REINF.	SEE DETAIL FOR TIES
P3	1' - 11"	2' - 5"	SEE DETAIL FOR REINF.	SEE DETAIL FOR TIES
P4	1' - 6"	1' - 6"	SEE DETAIL FOR REINF.	SEE DETAIL FOR TIES

ISOLATED FOOTING SCHEDULE

REMARKS:
A. TERMINATE ALL BARS WITH ACI STANDARD HOOKS.
B. TERMINATE TOP BARS ONLY WITH ACI STANDARD HOOKS.

MARK	WIDTH	LENGTH	THK.	REINFORCEMENT	REMARKS
F54	4' - 6"	4' - 6"	12"	(4) #5 E.W. BTM.	A
F66	5' - 6"	5' - 6"	12"	(5) #5 E.W. TOP & BTM.	A
F96	8' - 0"	8' - 0"	12"	(9) #6 E.W. TOP & BTM.	A

PROJECT NO.	39999-3609-04
PIN NO.	131121.0

REVISIONS

DESCRIPTION	BY	DATE

TDOT HENDERSON COUNTY MAINTENANCE BUILDING

370 ROCK MILAM ROAD
CEDAR GROVE, TN 38321

DATE AUGUST 18, 2023
PHASE CONSTRUCTION

Wold HFR DESIGN
214 Centerview Drive Suite 300
Brentwood, TN 37027
woldae.com phone: 615.370.8500
fax: 615.370.8530

SSR Smith Seckman Reid, Inc.
2650 Thousand Oaks Boulevard, Suite 4200
Memphis, TN 38118
(901) 683-3900
FAX: (901) 683-3990
www.ssr-inc.com
SSR Project #: --

SEALED BY

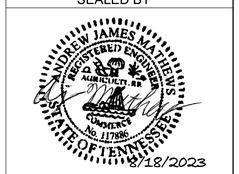

STATE OF TENNESSEE
DEPARTMENT OF
TRANSPORTATION

FOUNDATION PLAN

S1.0

SHEET 16 OF 34

FIELD SET TFM# 21349 PROJECT# 2024-04-17-10

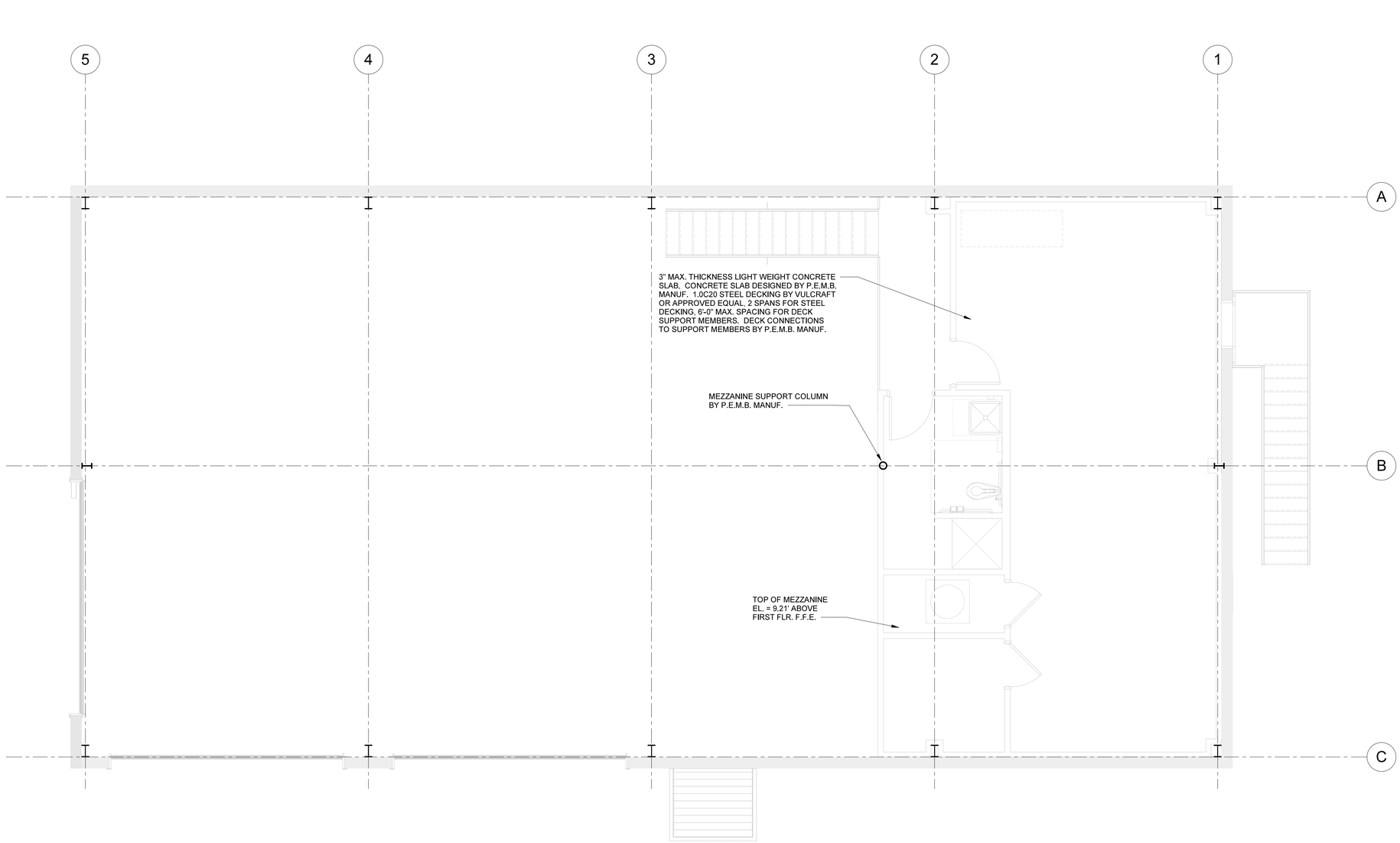

MEZZANINE PLAN

1/4" = 1'-0"

NOTES:

1. MEZZANINE TO BE DESIGNED BY P.E.M.B. MANUF.
2. MEZZANINE TO BE DESIGNED FOR THE FOLLOWING:
   a) 60 PSF LIVE LOAD ALLOWANCE
   b)18 PSF COLLATERAL LOAD ALLOWANCE
   c) APPROPRIATE DEAD LOADS FOR FRAMING AND CONCRETE DECK.
3. SEE PLUMBING DWGS. FOR REQ'D. PENETRATIONS.
4. A MINIMUM CEILING HEIGHT OF 8'-0" SHALL BE MAINTAINED UNDERNEATH MEZZANINE.

THESE PLANS AND SPECIFICATIONS MUST BE KEPT ON JOB SITE UNTIL A FINAL CERTIFICATE OF OCCUPANCY FOR THE COMPLETED FORM IS ISSUED BY THIS OFFICE.
No alterations, deletions, additions or modifications of any kind are allowed to this approved set without written permission of this office.
TENNESSEE STATE FIRE MARSHAL'S OFFICE

INTERIOR WALL TYPES

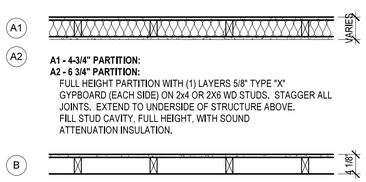

A1 - 4-3/4" PARTITION:
A2 - 6 3/4" PARTITION:
FULL HEIGHT PARTITION WITH (1) LAYERS 5/8" TYPE "X" GYPBOARD (EACH SIDE) ON 2x4 OR 2X6 WD STUDS. STAGGER ALL JOINTS. EXTEND TO UNDERSIDE OF STRUCTURE ABOVE. FILL STUD CAVITY, FULL HEIGHT, WITH SOUND ATTENUATION INSULATION.

4-1/8" PARTITION:

FULL HEIGHT PARTITION WITH (1) LAYERS 5/8" TYPE "X" GYPBOARD (ONE SIDE) ON 2x4 WD STUDS. STAGGER ALL JOINTS. EXTEND TO UNDERSIDE OF STRUCTURE ABOVE.

EXTERIOR WALL TYPES

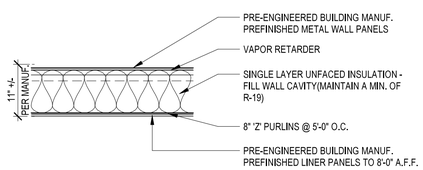

PROJECT NO.	39999-3609-04
PIN NO.	131121.0

REVISIONS

DESCRIPTION	BY	DATE

TDOT HENDERSON COUNTY MAINTENANCE BUILDING

370 ROCK MILAM ROAD
CEDAR GROVE, TN 38321

PHASE: CONSTRUCTION
DATE: AUGUST 18, 2023

Wold HFR DESIGN
214 Centerview Drive Suite 300
Brentwood, TN 37027
woldae.com phone: 615.370.8500
fax: 615.370.8530

SSR Smith Seckman Reid, Inc.
2650 Thousand Oaks Boulevard,
Suite 4200
Memphis, TN 38118
(901) 683-3900
FAX: (901) 683-3990
www.ssr-inc.com
SSR Project #: --

SEALED BY

STATE OF TENNESSEE
DEPARTMENT OF
TRANSPORTATION

MEZZANINE PLAN

S1.1

SHEET 17 OF 34

FIELD SET_TFM# 21349_PROJECT# 2024-04-17-10

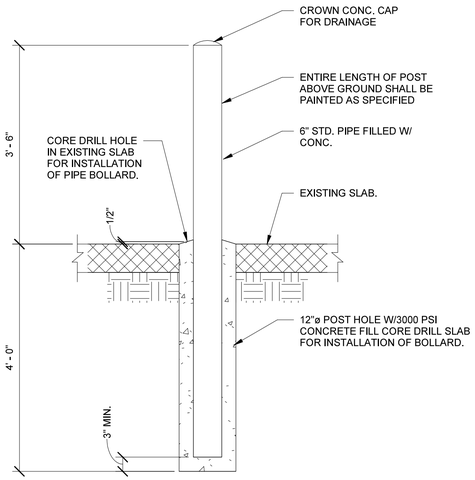

1 PIPE BOLLARD DETAIL
3/4" = 1'-0"

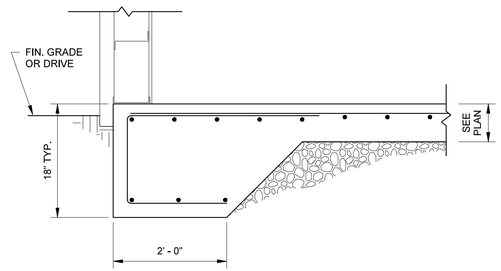

2 TYP. TURNED DOWN SLAB
3/4" = 1'-0"

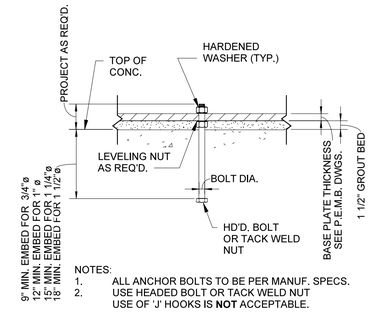

NOTES:
1. ALL ANCHOR BOLTS TO BE PER MANUF. SPECS.
2. USE HEADED BOLT OR TACK WELD NUT
USE OF 'J' HOOKS IS **NOT** ACCEPTABLE.

3 METAL BLDG. ANCHOR BOLT DETAIL
3/4" = 1'-0"

NOTES:
1. SAW CUT CONTROL JOINTS IMMEDIATELY AFTER SLAB HAS CURED SUFFICIENTLY TO SUPPORT WORKER AND SAW.
2. SPACE CONTROL JOINTS AS SHOWN ON PLAN.

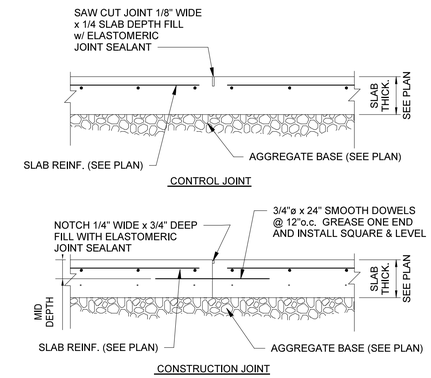

4 TYP. SLAB ON GRADE JOINTS
3/4" = 1'-0"

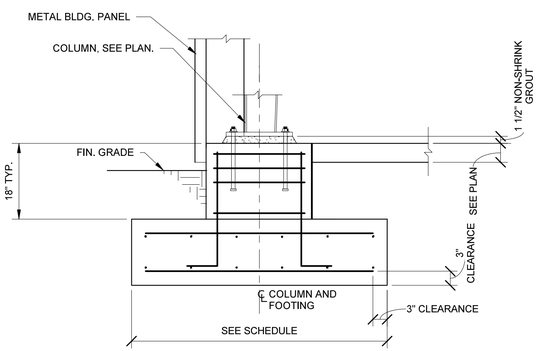

5 TYPICAL COLUMN FOOTING
3/4" = 1'-0"

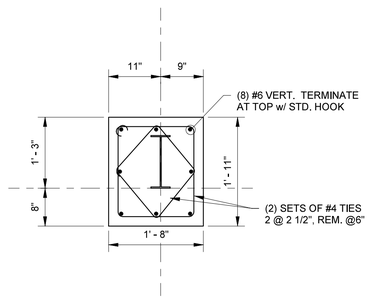

6 PEDESTAL P1
3/4" = 1'-0"

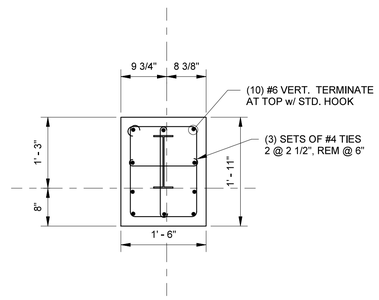

7 PEDESTAL P2
3/4" = 1'-0"

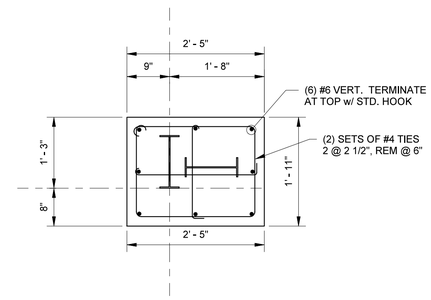

8 PEDESTAL P3
3/4" = 1'-0"

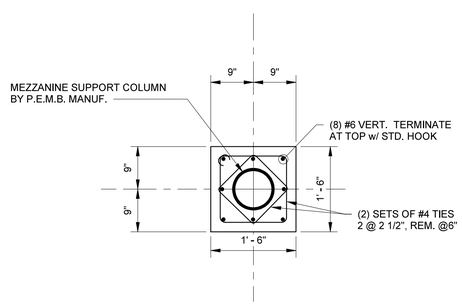

9 PEDESTAL P4
3/4" = 1'-0"

THESE PLANS AND SPECIFICATIONS ARE REQUIRED TO BE KEPT ON THE JOB SITE UNTIL A FINAL CERTIFICATE OF OCCUPANCY OR PROJECT COMPLETION FORM IS ISSUED BY THIS OFFICE.
No alterations, variations, additions or modifications of any kind are allowed on this approved set without written permission of this office.
TENNESSEE STATE FIRE MARSHALL'S OFFICE

PROJECT NO.	39999-3609-04
PIN NO.	131121.0

REVISIONS

DESCRIPTION	BY	DATE

TDOT HENDERSON COUNTY MAINTENANCE BUILDING

370 ROCK MILAM ROAD
CEDAR GROVE, TN 38321

PHASE: CONSTRUCTION
DATE: AUGUST 18, 2023

Wold HFR DESIGN
214 Centerview Drive Suite 300
Brentwood, TN 37027
woldae.com phone: 615.370.8500
fax: 615.370.8530

SSR Smith Seckman Reid, Inc.
2650 Thousand Oaks Boulevard, Suite 4200
Memphis, TN 38118
(901) 683-3900
FAX: (901) 683-3990
www.ssr-inc.com
SSR Project #: --

SEALED BY

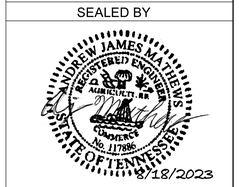

STATE OF TENNESSEE
DEPARTMENT OF
TRANSPORTATION

SECTIONS AND DETAILS

S5.1

SHEET 18 OF 34

FIELD SET TFM# 21349 PROJECT# 2024-04-17-10

MECHANICAL SYSTEMS

PART 1 GENERAL

1.1 REQUIREMENTS:

A. APPLICABLE PROVISION OF GENERAL CONDITIONS OF DIVISION 1, GENERAL REQUIREMENTS, GOVERN ALL WORK SPECIFIED IN THIS SECTION.

B. REFER TO ARCHITECTURAL DRAWINGS FOR APPLICABLE PROVISIONS OF THE GENERAL CONDITIONS FOR GENERAL REQUIREMENTS THAT GOVERN ALL WORK SPECIFIED IN THIS SECTION.

C. REFER TO MECHANICAL DRAWINGS FOR GENERAL REQUIREMENTS APPLYING, BUT NOT LIMITED TO THE FOLLOWING:

1. ALTERNATES
2. INSPECTION OF SITE.
3. VERIFICATION OF UTILITIES AND SERVICES.
4. REQUIREMENTS OF REGULATORY AGENCIES.
5. DRAWINGS
6. SAFETY DEVICES.
7. SHOP DRAWINGS.
8. GUARANTEE.

1.2 SCOPE OF WORK INCLUDED:

A. MECHANICAL WORK SHALL INCLUDE ALL CONSTRUCTION IN CONNECTION WITH HEATING, VENTILATING AND AIR CONDITIONING AS DESCRIBED HEREAFTER.

B. WORK SPECIFIED UNDER THIS SECTION INCLUDES FURNISHING OF AND PAYING FOR ALL MATERIALS, LABOR, EQUIPMENT LICENSES, TAXES, AND OTHER ITEMS REQUIRED FOR EXECUTION AND COMPLETION OF ALL WORK INDICATED.

C. EVERYTHING NECESSARY FOR A COMPLETE AND SATISFACTORY INSTALLATION INCLUDING ALL NECESSARY PARTS, DEVICES, ACCESSORIES, ETC., REQUIRED BY CODES OR THAT MAY BE REQUIRED TO SATISFACTORILY COMPLETE THE INSTALLATION OF THE ABOVE ITEMS SHALL BE PROVIDED.

1.3 RELATED WORK UNDER OTHER DIVISIONS OF THE CONTRACT:

A. CONCRETE PADS AND FOUNDATIONS - REF. STRUCTURAL
B. POWER AND CONTROL WIRING - REF. ELECTRICAL

1.4 REFERENCE STANDARDS:

A. ALL WORK MUST BE PERFORMED IN ACCORDANCE WITH THE REQUIREMENTS OF THE FOLLOWING PERTINENT STANDARDS AND LEGAL CODES AND ORDINANCES:

1. INTERNATIONAL BUILDING CODE AND PUBLICATIONS REFERRED TO THEREIN
2. OCCUPATIONAL SAFETY AND HEALTH ACT (OSHA)
3. STATE, COUNTY, AND LOCAL MECHANICAL, GAS, AND PLUMBING CODES
4. NATIONAL ELECTRICAL CODE (NEC), NFPA 70, 2017 EDITION
5. AIR MOVEMENT AND CONTROL ASSOCIATION (AMCA)
6. AMERICAN SOCIETY OF HEATING, REFRIGERATING AND AIR-CONDITIONING ENGINEERS, INC. (ASHRAE)
7. AMERICAN SOCIETY OF MECHANICAL ENGINEERS (ASME)
8. AMERICAN SOCIETY FOR TESTING AND MATERIAL (ASTM)
9. ASSOCIATED AIR BALANCE COUNCIL (AABC)
10. NATIONAL ENVIRONMENTAL BALANCING BUREAU (NEBB)
11. SHEET METAL AND AIR CONDITIONING CONTRACTORS' NATIONAL ASSOCIATION (SMACNA)
12. CAST IRON PIPE INSTITUTE (CIPI)
13. NATIONAL SANITATION FOUNDATION TESTING LABORATORY (NSF)
14. PLUMBING DRAINAGE INSTITUTE (PDI)
15. FACTORY MUTUAL GLOBAL (FM)
16. STANDARDS AND PERIODICALS LISTINGS, UNDERWRITERS LABORATORIES
17. FOR WORK NOT SPECIFICALLY LISTED ABOVE, USE THE STANDARDS AND CODES OF THE NATIONAL FIRE PROTECTION ASSOCIATION (NFPA)

1.5 INSPECTION OF THE SITE:

A. BIDDERS SHALL VISIT THE SITE OF THE WORK BEFORE SUBMITTING BIDS AND SATISFY THEMSELVES AS TO THE NATURE AND SCOPE OF ALL WORK TO BE DONE INCLUDING REQUIREMENTS OF LOCAL AUTHORITIES TO MEET WITH THEIR PROCEDURES OR CODES.

1.6 VERIFICATION OF UTILITIES AND SERVICES:

A. IMMEDIATELY UPON COMMENCING CONSTRUCTION, AND PRIOR TO CONSTRUCTION OF ANY PART OF THE FACILITY INVOLVED IN ANY WAY WITH UTILITIES, INVESTIGATE THOROUGHLY THE SIZE, CAPACITY, ARRANGEMENT AND LOCATION OF UTILITIES. REPORT ANY DISCREPANCIES OR APPARENT PROBLEM INVOLVING THE PROJECT THAT PERTAIN TO UTILITIES. THIS APPLIES TO PRIVATE AS WELL AS PUBLIC UTILITIES.

1.7 REQUIREMENTS OF REGULATORY AGENCIES:

A. ALL WORK SHALL BE EXECUTED AND INSPECTED IN ACCORDANCE WITH ALL LOCAL OR STATE CODES, LAWS, ORDINANCES, RULES AND REGULATIONS APPLICABLE TO THE PARTICULAR CLASS OF WORK AND SHALL INCLUDE ALL APPLICABLE SERVICE CHARGES, FEES, PERMITS, ROYALTIES, TAXES, AND OTHER SIMILAR COSTS IN CONNECTION THEREWITH. IF THE DRAWINGS OR SPECIFICATIONS ARE AT VARIANCE WITH ABOVE MENTIONED LAWS, RULES AND REGULATIONS, NOTIFY THE ENGINEER IN WRITING SO ANY NECESSARY CHANGES CAN BE PROVIDED PRIOR TO CONTRACT.

B. IF THE CONTRACTOR PERFORMS ANY WORK KNOWING IT TO BE CONTRARY TO SUCH LAWS, RULES OR REGULATIONS, AND WITHOUT NOTICE AS REQUIRED ABOVE, HE SHALL BEAR COSTS ARISING THEREFROM. THE DRAWINGS AND SPECIFICATIONS TAKE PRECEDENCE WHEN THEY ARE MORE STRINGENT THAN CODES, ORDINANCES, OR STATUTES IN EFFECT.

C. APPLICABLE CODES, ORDINANCE, STANDARDS AND STATUTES TAKE PRECEDENCE WHERE THEY ARE MORE STRINGENT OR CONFLICT WITH THE DRAWINGS AND SPECIFICATIONS.

1.8 INSTRUCTION OF OWNER:

A. WHEN THE SYSTEM IS IN COMPLETE OPERATION, AND PRIOR TO DATE OF FINAL COMPLETION, PROVIDE AN APPROVED QUALIFIED ENGINEER, TECHNICIAN, OR MECHANIC, FOR A PERIOD OF FOUR (4) MAN-HOURS TO INSTRUCT THE OWNER, OR HIS AUTHORIZED PERSONNEL, IN OPERATION AND MAINTENANCE OF ALL SYSTEMS INSTALLED UNDER THIS SECTION OF WORK, OR RELATED WORK UNDER OTHER SECTIONS.

B. REVIEW OPERATING AND MAINTENANCE MANUAL. IDENTIFY ALL CONTROLS AND ALL LUBRICATION POINTS, DEMONSTRATE START, STOP, AND ADJUSTMENTS OF ALL SYSTEMS AND EQUIPMENT.

1.9 DRAWINGS:

A. IT IS INTENDED THAT ALL PARTS AND COMPONENTS BE LOCATED SYMMETRICALLY WITH ARCHITECTURAL ELEMENTS, AND SHALL BE INSTALLED AT EXACT HEIGHT AND LOCATIONS AS SHOWN ON THE ARCHITECTURAL DRAWINGS.

B. BE ACQUAINTED WITH ANY AND ALL PECULIARITIES AND LIMITATIONS OF THE SPACES AVAILABLE FOR THE INSTALLATION OF ALL WORK AND MATERIALS FURNISHED AND INSTALLED UNDER THIS SECTION OF THE SPECIFICATIONS, EXERCISE DUE AND PARTICULAR CAUTION TO DETERMINE THAT ALL PARTS OF THE WORK ARE MADE QUICKLY AND EASILY ACCESSIBLE.

C. ALTHOUGH THE LOCATIONS OF THE EQUIPMENT AND PIPING MAY BE SHOWN ON THE DRAWINGS IN CERTAIN POSITIONS, SHOULD THE CONTRACTOR DISCOVER CONFLICTS OR INTERFERENCES DURING PROGRESS OF THE WORK HE SHALL REPORT ANY DISCREPANCIES OR INTERFERENCES THAT ARE DISCOVERED. FAILURE TO REPORT SUCH DISCREPANCIES AND INTERFERENCES SHALL RESULT IN THE CORRECTING OF THESE ERRORS OR OMISSIONS BY THIS SECTION AT HIS OWN EXPENSE. ALL WORK INSTALLED UNDER THIS SECTION WHICH DEVIATES FROM THE DRAWINGS AND SPECIFICATION WITHOUT PRIOR APPROVAL, SHALL BE ALTERED BY THIS SECTION AT HIS OWN EXPENSE, TO COMPLY WITH THE DRAWINGS AND SPECIFICATIONS AS DIRECTED.

D. THE DRAWINGS ARE SCHEMATIC IN NATURE AND DO NOT REFLECT ALL OFFSETS OR CHANGES OF DIRECTION OR ELEVATION TO COORDINATE WITH THE ACTUAL CONSTRUCTION OF THE PROJECT. CONTRACTOR SHALL COORDINATE WITH THE ACTUAL CONDITIONS PRESENTED DURING CONSTRUCTION TO ENSURE THE INTENT OF THE DESIGN IS MET.

1.10 SAFETY DEVICES:

A. CONTRACTOR SHALL FURNISH AND INSTALL SAFETY GUARDS FOR ALL DANGEROUS MOVING PARTS SUCH AS BELTS AND PULLEYS, FLEXIBLE SHAFT CONNECTIONS AND THE LIKE, AND SHALL PROVIDE ALL REQUIRED SAFETY CONTROLS TO PREVENT DANGEROUS OR DAMAGING OPERATION OF EQUIPMENT.

1.11 SHOP DRAWINGS (SUBMITTALS):

A. EQUIPMENT SUBMITTALS:

1. ELECTRONIC COPIES OF SHOP DRAWINGS AND/OR MANUFACTURER'S DESCRIPTIVE DATA IN A PDF FORMAT OF A NATURE TO COMPLETELY IDENTIFY THE EQUALITY OF THE MATERIAL OR EQUIPMENT INTENDED FOR INSTALLATION SHALL BE SUBMITTED FOR APPROVAL BEFORE BEGINNING ANY CONSTRUCTION AND WITHIN THIRTY DAYS AFTER SIGNING CONTRACT. FAILURE TO SUBMIT DATA FOR APPROVAL WITHIN THIRTY DAYS TIME LIMIT WILL BE CONSTRUED AS MEANING EQUIPMENT CALLED FOR BY NAME WILL BE FURNISHED. DATA SHALL BE ORGANIZED IN SAME ORDER AS LISTED BELOW, SHALL BE SUBMITTED ALL IN ONE BROCHURE, INDEXED BY FLYSHEET ON FRONT PAGE, AND BE BOUND IN SETS, ALL SETS IDENTICAL. NO EXCEPTION WILL BE MADE TO THIS PROCEDURE AND TIME SCHEDULE.

2. EACH ITEM SUBMITTED FOR REVIEW SHALL BE MARKED AND HAVE SUBMITTAL DATA PRECEDED BY A TYPEWRITTEN DESCRIPTION (BY CONTRACTOR OR ITEM SUPPLIER) OF THE ITEM. DESCRIPTION TO INCLUDE MAKE AND MODEL NUMBERS AND SHALL DESCRIBE THE ITEM. LIST ALL OPTIONS AND ACCESSORIES WHICH ARE INCLUDED. LIST ANY OPTIONS OR ACCESSORIES SHOWN ON SHOP DRAWINGS WHICH ARE NOT INCLUDED.

3. SUBMIT THE FOLLOWING FOR APPROVAL, REFERRING TO THE VARIOUS SECTIONS OF THIS SPECIFICATION FOR SPECIFIC ITEMS (AS APPLICABLE):

a. HEATING EQUIPMENT.
b. VENTILATING OR EXHAUST EQUIPMENT.
c. DUCT INSULATION.
d. DUCT HANGERS.
e. AIR DISTRIBUTION EQUIPMENT.
f. PIPING.
g. VALVES.

1.12 GUARANTEE:

A. ALL WORK PERFORMED UNDER THIS DIVISION SHALL BE GUARANTEED TO BE FREE FROM DEFECTS IN MATERIAL AND WORKMANSHIP FROM DATE OF SUBSTANTIAL COMPLETION OF SUCH WORK FOR A PERIOD OF ONE YEAR FROM THE DATE OF SUBSTANTIAL COMPLETION.

B. LATENT DEFECTS ARISING DURING THIS PERIOD SHALL, UPON NOTIFICATION BY THE OWNER, BE PROMPTLY CORRECTED AT NO ADDITIONAL COST TO THE OWNER.

1.13 COORDINATION:

A. COORDINATE ALL WORK WITH THAT OF THE OTHER TRADES ON THE JOB AND ALSO WITH THAT OF THE OWNER, IN ORDER THAT THERE WILL BE NO DELAY IN THE PROPER INSTALLATION AND COMPLETION OF THE WORK. ANY COST FOR EXTRA WORK OR MATERIALS RESULTING FROM LACK OF COORDINATION OF WORK PERFORMED UNDER THIS SECTION SHALL BE BORNE BY THIS SECTION.

1.14 WORKMANSHIP, MATERIALS AND EQUIPMENT:

A. ALL WORK SHALL BE PERFORMED IN A WORKMANLIKE MANNER AND SHALL PRESENT A NEAT AND MECHANICAL APPEARANCE WHEN COMPLETED. ALL MATERIALS SHALL BE OF TYPE, QUALITY, AND OF MINIMUM RATING PRESCRIBED HEREIN OR AS INDICATED ON THE PLANS.

1.15 MANUFACTURER'S RECOMMENDATIONS:

A. ALL MATERIAL AND EQUIPMENT SHALL BE INSTALLED IN STRICT ACCORDANCE WITH THE MANUFACTURER OF SUCH MATERIAL AND EQUIPMENT.

B. IN THE EVENT OF DISCREPANCY BETWEEN MANUFACTURER'S RECOMMENDATIONS AND ANY REQUIREMENTS OF DRAWINGS OR SPECIFICATIONS, CONTRACTOR SHALL NOTIFY ARCHITECT/ENGINEER IN ORDER THAT THE MATTER CAN BE CLEARED UP PRIOR TO ANY INSTALLATION OF MATERIALS OR EQUIPMENT.

1.16 PROTECTION OF WORK:

A. PROTECT WORK AT ALL TIMES FROM DANGER BY FREEZING, BREAKAGE, DIRT, FOREIGN MATERIALS, ETC., AND REPLACE ALL WORK SO DAMAGED. USE EVERY PRECAUTION TO PROTECT THE WORK OF OTHERS, AND BE RESPONSIBLE FOR ALL DAMAGE TO OTHER WORK CAUSED BY WORK OF, OR THROUGH THE NEGLECT OF WORKMEN UNDER THIS SECTION OF THE SPECIFICATIONS.

1.17 EQUIPMENT/PIPING SUPPORTS:

A. FURNISH AND ERECT ALL NECESSARY STEEL MEMBERS, FRAMES, CONNECTIONS, ETC., TO SUPPORT EQUIPMENT AND PIPING INSTALLED UNDER THIS SECTION, REGARDLESS OF WHETHER THE DRAWINGS INDICATE SUPPORT DETAILS OR NOT. COORDINATE WITH GENERAL CONTRACTOR TO DETERMINE WHICH SUPPORTS ARE BEING FURNISHED BY OTHER SECTIONS.

B. PROVIDE CONCRETE PADS, CURBS, ETC. FOR SUPPORT OF EQUIPMENT AND PIPING INSTALLED UNDER THIS SECTION, WHETHER SHOWN ON DRAWINGS OR NOT, EXCEPT WHERE SUPPORTS ARE REQUIRED TO BE FURNISHED AND INSTALLED BY OTHER SECTIONS OF THESE SPECIFICATIONS. COORDINATE RESPONSIBILITY WITH GENERAL CONTRACTOR.

C. PROVIDE VIBRATION ABSORBING, MOUNTING DEVICES (INCLUDING SEISMIC RESTRAINT) DESIGNED TO PREVENT TRANSMISSION OF VIBRATION AND NOISE TO THE BUILDING STRUCTURE.

1.18 PAINTING AND IDENTIFICATION:

A. THE FOLLOWING PROTECTIVE PAINTING AND IDENTIFICATION OF EQUIPMENT AND PIPING SHALL BE PROVIDED UNDER THIS DIVISION OF THE WORK, OTHER FINISH PAINTING SHALL BE PROVIDED UNDER THE "PAINTING" DIVISION OF THE SPECIFICATIONS.

1. FABRICATED EQUIPMENT AND ASSEMBLED UNITS SHALL BE FURNISHED WITH FACTORY APPLIED, PROTECTIVE, PRIME COAT PAINT OF FINISHED BAKED ENAMEL AS SPECIFIED HEREINBEFORE. EQUIPMENT SURFACES DAMAGED DURING THE COURSE OF CONSTRUCTION SHALL BE REFINISHED BY THE CONTRACTOR.

1.19 TESTING:

A. UPON COMPLETION OF WORK, ALL EQUIPMENT SHALL BE CLEANED AND ADJUSTED FOR PROPER OPERATION AND ANY DEFECTS DISCOVERED SHALL BE CORRECTED BEFORE FINAL INSPECTION PRIOR TO ACCEPTANCE.

B. ALL AIR LEAKS SHALL BE REPAIRED. DUCTWORK SHALL BE TESTED FOR LEAKS BEFORE APPLYING EXTERNAL INSULATION AND BEFORE CONCEALING IN INACCESSIBLE LOCATIONS.

C. THE ABOVE TESTS SHALL BE MADE IN THE PRESENCE OF THE OWNER OR HIS AUTHORIZED REPRESENTATIVE. THE TEST RESULTS SHALL BE INCLUDED IN THE O&M MANUALS AS PART OF

1.20 ADJUSTMENTS:

A. UPON COMPLETION OF THE INSTALLATION OF ALL WORK AND EQUIPMENT, THE CONTRACTOR SHALL START ALL EQUIPMENT AND MAKE ALL NECESSARY ADJUSTMENTS TO PLACE ENTIRE HEATING, VENTILATING, AND AIR CONDITIONING SYSTEMS IN A SATISFACTORY CONDITION FOR CONTINUOUS SAFE OPERATION.

B. ALL FILTERS SHALL BE REPLACED WITH THE SPECIFIED TYPE AFTER THE PERIOD OF ADJUSTMENT.

C. AIR CIRCULATION SYSTEMS SHALL BE ALCOHOL CLEANED, FREE OF ALL DIRT AND DEBRIS AND ADJUSTED TO PROVIDE UNIFORM HEATING AND/OR COOLING OF ALL SPACES SERVED BY EACH SYSTEM. TEST ADJUSTMENTS SHALL BE CONTINUED UNTIL UNIFORM TEMPERATURE WITHIN CONDITIONED AREAS HAS BEEN ATTAINED WITHIN TWO (2) DEGREES FAHRENHEIT FOR ONE (1) DEGREE ABOVE AND BELOW THERMOSTATIC SETTING.

D. TEMPERATURE AND SAFETY CONTROLS SHALL BE ADJUSTED AS NECESSARY TO INSURE CONTINUOUS, TROUBLE FREE, SAFE, AND AUTOMATIC OPERATION OF SYSTEMS.

1.21 CONTRACTOR'S TEST AND BALANCE:

A. TEST AND BALANCE SHALL BE PERFORMED BY FOLLOWING THE PROCEDURES RECOMMENDED BY THE AABC, OR NEBB.

B. AIR FLOWS SHALL BE BALANCED TO PLUS OR MINUS 5 PERCENT OF SPECIFIED QUANTITIES. LIST ALL FANS, COILS, SUPPLY, RETURN, AND EXHAUST OUTLETS. PROVIDE INLET AND OUTLET TEMPERATURES FOR ALL COILS. PROVIDE LOCATION, SPECIFIED AIR QUANTITY, FACE AREA, FACE VELOCITY AND MEASURED AIR QUANTITY FOR ALL COILS AND SUPPLY, RETURN, AND EXHAUST OUTLETS.

C. LIST OUTDOOR DRY BULB AND WET BULB TEMPERATURES, AND DRY BULB TEMPERATURE OF ALL CONDITIONED SPACES.

D. VERIFICATION OF PERFORMANCE OF EQUIPMENT AND AUTOMATIC TEMPERATURE CONTROLS.

E. PREPARE AND TURN OVER TO THE OWNER OR ARCHITECT, ELECTRONIC COPIES OF ALL TEST AND BALANCE DATA.

1.22 CLEAN-UP:

A. KEEP THE PREMISES FREE FROM ACCUMULATION OF WASTE MATERIALS OR RUBBISH CAUSED BY EMPLOYEES OR WORK UNDER THIS SECTION OF THE SPECIFICATIONS. AT THE COMPLETION OF THE WORK, REMOVE ALL SURPLUS MATERIALS, TOOLS, ETC., AND LEAVE THE PREMISES "BROOM-CLEAN".

1.23 INSTRUCTION OF OWNER:

A. PROVIDE THE SERVICES OF APPROVED QUALIFIED ENGINEER, TECHNICIAN OR MECHANIC FOR A PERIOD OF 4 HOURS TO INSTRUCT THE OWNER OR HIS AUTHORIZED REPRESENTATIVE, IN ALL PHASES OF OPERATION AND MAINTENANCE OF EACH OF THE MECHANICAL SYSTEMS.

1.24 OPERATING AND MAINTENANCE INSTRUCTIONS:

A. FURNISH AND TURN OVER TO A/E THREE (3) HARD COPIES AND ONE ELECTRONIC COPY OF OPERATION AND MAINTENANCE INSTRUCTIONS, TO INCLUDE:

1. COMPLETE SET OF APPROVED SUBMITTAL DATA ON INSTALLED EQUIPMENT, TO INCLUDE FINAL TEST AND BALANCE REPORT, AS BUILT TEMPERATURE CONTROL DIAGRAMS AND WIRING DIAGRAMS.

2. OPERATING INSTRUCTIONS ON ALL EQUIPMENT HAVING MOVING PARTS, TO INCLUDE RECOMMENDED MAINTENANCE AND INSPECTION SCHEDULE.

3. PARTS LISTS ON ALL EQUIPMENT, ALONG WITH NAME, ADDRESS, AND TELEPHONE NUMBER OF SOURCE OF PURCHASE OR LOCAL REPRESENTATIVE.

4. COPIES OF ALL WARRANTIES OR GUARANTEES.

5. COPIES OF INSTALLATION INSTRUCTIONS WHEN FURNISHED WITH EQUIPMENT.

B. INSTRUCTIONS SHALL BE IN HARD COVER BINDER WITH INDEX. INSERT IN ORDER AS LISTED HEREIN. PROVIDE ELECTRONIC COPY.

PART 2 PRODUCTS

2.1 MATERIALS AND EQUIPMENT:

A. MATERIALS AND/OR EQUIPMENT SPECIFIED HEREIN TO BE OF A CERTAIN MANUFACTURER OR BRAND ARE USED AS A STANDARD AND MATERIALS AND/OR EQUIPMENT OF OTHER MANUFACTURER MAY BE SUBMITTED FOR SUBSTITUTION PROVIDED THAT THEY MEET OR EXCEED QUALITY AND ALL CAPACITIES SPECIFIED AND SPACE REQUIREMENTS SHOWN ON THE DRAWINGS.

2.2 EXHAUST FAN:

A. FAN SHALL BE ACME MASTER-ETTE, GREENHECK, COOK, PENN, OR APPROVED EQUAL. FAN SHALL HAVE ACOUSTICAL HOUSING, DIRECT CONNECTED CENTRIFUGAL FAN, ANODIZED ALUMINUM FINISH, AND SHALL BE BOTH AMCA AND UL APPROVED. CAPACITIES SHALL BE AS INDICATED ON PLANS.

B. ACCESSORIES SHALL INCLUDE BACKDRAFT DAMPER

2.3 LOW PRESSURE DUCTWORK:

A. DUCTWORK SUBJECT TO PRESSURES UP TO 2.0" WATER COLUMN SHALL BE DESIGNATED LOW PRESSURE DUCTWORK AND SHALL BE CONSTRUCTED OF GALVANIZED STEEL ASTM A525-75 GRADE G90, HOT DIP GALVANIZED TO 0.90 OZ. OF ZINC PER SQUARE FOOT OF METAL.

B. ALL CONSTRUCTION AND CONSTRUCTION METHODS SHALL BE IN ACCORDANCE WITH S.M.A.C.N.A. RECOMMENDATIONS.

C. ALL DUCT SIZES SHOWN ON DRAWINGS ARE NET INSIDE CLEAR DIMENSIONS MEASURED INSIDE BARE DUCT.

D. METAL GAUGE, LONGITUDINAL AND TRANSVERSE JOINTS, SHALL BE FOR 2.0" PLUS OR MINUS STATIC PRESSURE, UNLESS OTHERWISE INDICATED ON DRAWINGS.

E. RADIUS ELBOWS SHALL HAVE MINIMUM CENTERLINE RADIUS OF 1.5 X DUCT WIDTH. LARGER ELBOWS SHALL BE VANED PER S.M.A.C.N.A. DETAILS. SQUARE ELBOWS SHALL HAVE FACTORY TURNING VANES, PER S.M.A.C.N.A. DETAILS, BARBER COLEMAN "AIRTURNS", OR EQUIVALENT TITUS.

F. TRANSITIONS SHALL BE AS GRADUAL AS POSSIBLE, BUT NOT TO EXCEED 30° PER SIDE.

G. BRANCH DUCT TAKEOFFS FOR RECTANGULAR DUCTS SHALL BE ONE OF THE FOLLOWING:

1. 90° TAKEOFF (STRAIGHT TAP) WITH ADJUSTABLE DEFLECTOR IN TRUNK DUCT, OR FIXED DEFLECTOR WITH MANUAL DAMPER.

2. 45° ELBOW TAP-IN.

3. 90° TAKEOFF WITH 45° ENTRY.

H. BRANCH DUCT TAKEOFFS FOR ROUND DUCT SHALL BE MADE WITH ONE OF THE FOLLOWING:

1. 45° TAKEOFF.

2. 90° CONICAL TAP-IN.

3. RECTANGULAR TO ROUND TRANSITION BOOT, 45° ENTRY.

I. ALL BRANCH TAKEOFFS SHALL HAVE MANUAL DAMPER WITH QUADRANT.

J. FINAL CONNECTIONS FROM DUCTS TO CEILING DIFFUSERS MAY BE MADE WITH FLEXIBLE INSULATED DUCT NOT TO EXCEED 3'-6" IN LENGTH.

2.4 >OMITTED<

2.5 DIFFUSERS, GRILLES AND REGISTERS:

A. CEILING SUPPLY AND RETURN DIFFUSERS SHALL BE SIZED FOR A MAXIMUM STATIC PRESSURE DROP OF 0.05 INCHES W.G., AND MAXIMUM NOISE LEVEL OF NC=30. SELECTION FOR THROW TO NEAREST WALL SHALL PROVIDE A DOWNWARD AIR MOVEMENT AT WALL OF 50 FPM.

B. ALL CEILING DIFFUSERS SHALL HAVE VOLUME CONTROL DAMPER OPERABLE FROM THE FACE OF THE DIFFUSER. DIFFUSERS AND GRILLES SHALL BE AS INDICATED ON THE SCHEDULE.

C. UNLESS OTHERWISE NOTED ON DRAWINGS AIR DISTRIBUTION CONSTRUCTION AND FINISHES SHALL BE AS FOLLOWS:

1. CEILING DIFFUSERS - STEEL CONSTRUCTION BAKED WHITE ENAMEL FINISH.

2. GRILLES AND REGISTERS

CEILING- STEEL OR ALUMINUM CONSTRUCTION BAKED WHITE ENAMEL FINISH.

D. CEILING DIFFUSERS, SUPPLY AND RETURN, SHALL HAVE REMOVABLE FACE PLATE AND FRAMES SELECTED FOR THE CEILING CONSTRUCTION IN WHICH INSTALLED (T-BAR, SPLINE, ETC.).

2.6 DAMPERS:

A. MANUAL VOLUME DAMPERS SHALL BE INSTALLED IN EACH BRANCH DUCT, AND WHERE INDICATED.

B. DAMPER CONSTRUCTION SHALL BE PER FIGURE 2-14 AND 2-L5 OF SMACNA "HVAC DUCT CONSTRUCTION STANDARDS", FIRST EDITION. MARK END OF SHAFT PARALLEL TO BLADE AND PROVIDE LOCKING QUADRANT.

C. PROVIDE STAND-OFF ASSEMBLY FOR ALL DAMPERS INSTALLED ON INSULATED DUCT.

2.8 HANGERS AND SUPPORTS:

A. PIPING SHALL BE HUNG FROM STRUCTURE BY ADJUSTABLE HANGERS, PER ANSI/MSS STANDARD SP-58, SP-69 AND SP-89, SPACED AS NOTED WITH ADDITIONAL SUPPORT FOR VALVES AND SPECIALTIES, OR AT JOINTS SO ADJUSTMENTS FOR PITCH CAN BE MADE AFTER INSTALLATION. REFERENCES ARE TO GRINNELL FIGURE NUMBERS. COMPARABLE PRODUCTS OF F & S, ELCEN, MICHIGAN, OR B-LINE ARE ACCEPTABLE.

1. FERROUS PIPE (HORIZONTAL).

a. 2 INCH AND SMALLER - GRINNELL FIG. 104 ADJUSTABLE SPLIT RINGS.

b. OVER 2 INCH - GRINNELL FIG. 260 STEEL CLEVIS.

c. WHERE PIPES ARE GROUPED, USE OF "UNISTRUT" RACKS AND BRACKETS WILL BE PERMISSIBLE.

2. COPPER TUBING (HORIZONTAL)

a. 1/2 INCH TO 6 INCH SIZE - GRINNELL FIG. 260 WITH FIG 81 INSULATION PROTECTORS, LENGTH AND GAUGE AS RECOMMENDED BY MANUFACTURER.

3. VERTICAL PIPING (ALONG WALLS)

a. STEEL: 1 INCH AND SMALLER - ANCHOR MIDWAY BETWEEN FLOOR AND CEILING WITH GRINNELL FIG. 103 STEEL OFFSET PIPE CLAMPS.

b. COPPER TUBING: 1 INCH AND SMALLER - ANCHOR MIDWAY BETWEEN FLOOR AND CEILING WITH GRINNELL FIG. CT-138R SPLIT RING EXTENSION HANGER.

B. ROD SUSPENSION-SUSPEND HANGER RODS FROM SUPPORTS AS LISTED HEREIN. FIGURE NUMBERS USED REFER TO GRINNELL CATALOGS. COMPARABLE PRODUCTS OF F & S, ELCEN, MICHIGAN OR B-LINE ARE ACCEPTABLE. WIRE FASTENINGS SHALL NOT BE USED.

1. STEEL BEAMS: FIG. 217, 218, 225 OR 227 BEAM CLAMPS

2. STEEL JOISTS: FIG. 64 CLAMP FASTEN TO TOP CHORD OF BAR JOIST WITH THREADED ROD AND HANGER WHEN PIPES PASS THROUGH BAR JOISTS. WHEN PARALLEL TO JOISTS PROVIDE AN ANGLE WELDED TO ADJACENT JOISTS FOR FASTENING OR HANGER ROD.

3. PIPE ALONG WALLS: FIG. 194 OR 195 WELDED STEEL BRACKETS, DEPENDENT ON STRENGTH REQUIRED.

2.9 INSULATION:

A. PIPE AND EQUIPMENT INSULATION
1. Materials for Pipe and Equipment: Provide factory premolded insulation for pipe, pipe fittings, and valves. Fitting insulation shall be the same thickness and material as adjoining pipe insulation.
2. Flexible Tubular Elastomeric:
A. Provide fire-retardant closed-cell slip-on flexible type; minimum "R" value of 2.57
B. Acceptable manufacturers: Aeroflex "Aerocel", Armacell "AP/Armaflex", or K-Flex "Insul-Tube".
C. Use on the following services:
b. Refrigerant lines: 1-1/2" thick (2 layers of 3/4" thick).

B. INSTALLATION OF PIPE AND EQUIPMENT COVERING
A. Finish for all piping exposed-to-the-weather shall be Childers, or equal, .016 inch thick aluminum jacket on piping and Ell jacs, or equal, pre-formed aluminum covering on fittings.
B. Apply flexible tubular elastomeric insulation to pipe and fittings with all joints tightly fitted and sealed with adhesive.

C. SMOKE AND FLAME RATING:

1. ALL INSULATION SHALL HAVE COMPOSITE FIRE AND SMOKE HAZARD RATING AS TESTED BY PROCEDURES ASTM E-84, NFPA 255, AND WL 723 NOT EXCEEDING FLAME SPREAD 25 AND SMOKE DEVELOPED 50.

PLANS AND SPECIFICATIONS MUST BE KEPT ON THE JOB SITE UNTIL A FINAL CERTIFICATE OF OCCUPANCY OR PRODUCT COMPLETION FORM IS ISSUED BY THIS OFFICE.
No alterations, deletions, additions or modifications of any kind are permitted without approval of this office.
TENNESSEE STATE FIRE MARSHAL'S OFFICE

PROJECT NO.	39999-3609-04
PIN NO.	131121.0

REVISIONS

DESCRIPTION	BY	DATE

TDOT HENDERSON COUNTY MAINTENANCE BUILDING
370 ROCK MILAM ROAD
CEDAR GROVE, TN 38321

PHASE CONSTRUCTION
DATE AUGUST 18, 2023

FIELD SET_TFM# 21349 PROJECT# 2024-04-17-10

Wold HFR DESIGN
214 Centerview Drive Suite 300
Brentwood, TN 37027
woldae.com phone: 615.370.8500
fax: 615.370.8530

SSR Smith Seckman Reid, Inc.
2650 Thousand Oaks Boulevard,
Suite 4200
Memphis, TN 38118
(901) 683-3900
FAX: (901) 683-3990
www.ssr-inc.com
SSR Project #: 22640620

SEALED BY

WALTER E. BLACK REGISTERED ENGINEER AGRICULTURE COMMERCE No. 104853 STATE OF TENNESSEE
05/31/2023

STATE OF TENNESSEE
DEPARTMENT OF
TRANSPORTATION

MECHANICAL SPECIFICATIONS

M0.1

PART 3 EXECUTION

3.1 GENERAL REQUIREMENTS:

A. REFER TO PART 1 GENERAL FOR:

1. COORDINATION
2. WORKMANSHIP, MATERIALS AND EQUIPMENT
3. MANUFACTURER'S RECOMMENDATIONS
4. PROTECTION OF WORK
5. UTILITY CONNECTIONS
6. PATCHING
7. PAINTING IDENTIFICATION
8. ADJUSTMENTS
9. CONTRACTORS TEST AND BALANCE
10. CLEAN-UP

3.2 LOW VELOCITY DUCTWORK:

A. FOLLOW RECOMMENDATION OF ASHRAE "HANDBOOK", SMACNA "LOW PRESSURE DUCT CONSTRUCTION METHODS", AND THE DRAWINGS.

B. UNLESS INDICATED OTHERWISE ON DRAWINGS ALL LOW PRESSURE DUCTWORK FOR 2" W.C. PRESSURE.

C. SEAL ALL JOINTS BY DIPPING IN HARD CAST TAPE DT-5400 IN HARD CAST ACTIVATOR RTA 50 AND THEN WRAPPING AROUND AND OVER THE JOINTS.

D. TRANSVERSE JOINT SYSTEMS MANUFACTURED BY DUCTMATE OR EQUAL ARE ACCEPTABLE.

E. IN GENERAL, VERTICAL RISERS AND OTHER DUCT RUNS WHERE THE METHOD OF SUPPORT SPECIFIED ABOVE IS NOT APPLICABLE SHALL BE SUPPORTED BY SUBSTANTIAL ANGLE BRACKETS DESIGNED TO MEET FIELD CONDITIONS AND INSTALLED TO ALLOW FOR DUCT EXPANSION.

F. WHERE DUCTS PASS THROUGH WALLS, FLOORS OR PARTITIONS, THE EDGES SHALL BE PACKED WITH MINERAL FIBER OR OTHER NON-COMBUSTIBLE MATERIAL. AFTER HOLE IS FILLED, PROVIDE SHEET METAL COLLAR AROUND THE DUCT TO COVER THE ROUGH OPENING.

G. VOLUME DAMPERS SHALL BE INSTALLED WHERE BRANCHES TAKE-OFF FROM MAIN TRUNK DUCTWORK, WHERE DUCTS DIVIDE, OR WHERE SHOWN ON THE PLANS.

H. PROVIDE FLEXIBLE CONNECTIONS AT ALL CONNECTIONS BETWEEN DUCTS AND FANS OR CASINGS.

I. DAMPERS: PROVIDE ACCESSIBLE VOLUME DAMPERS IN BRANCH DUCTS, CONNECTIONS TO GRILLES, AND OTHER PLACES WHERE NECESSARY TO BALANCE THE AIRFLOW, WHETHER SHOWN ON PLANS OR NOT.

J. FIRE STOPPING SHALL BE PROVIDED AT ALL DUCT PENETRATIONS OF FIRE RATED WALLS, PARTITIONS, FLOORS, ROOFS, OR OTHER RATED BUILDING ASSEMBLIES. PROVIDE GROUT TO FILL OPENINGS IN HOLLOW MASONRY AROUND WALL OPENINGS. PROVIDE SHEET METAL SLEEVE AT OTHER HOLLOW WALL OR PARTITIONS. PACK OPENING BETWEEN DUCT AND SLEEVE OR OPENING ON ALL SIDES WITH FIREPROOF MINERAL WOOL AND CAULK EACH SIDE WITH NON-COMBUSTIBLE CALKING COMPOUND.

3.3 REGISTERS AND DIFFUSERS:

A. CEILING DIFFUSERS SHALL BE INSTALLED IN MANNER RECOMMENDED FOR THE TYPE CEILING IN WHICH INSTALLED. ALL SHALL BE CENTERED GEOMETRICALLY IN CEILING ELEMENTS WITH SIDES PARALLEL TO WALLS AND PARTITIONS. PROVIDE SUPPORTS ABOVE CEILING WHERE REQUIRED TO SUPPORT OUTLET WEIGHT AND TO PULL SURFACE FLANGES FLUSH TO CEILING. INSULATE TOPS OF DIFFUSERS AND REGISTERS ABOVE CEILING IN NON PLENUM RETURN CEILING SPACES.

3.4 >OMITTED<

3.6 SLEEVES:

A. PIPES PASSING THROUGH WALLS, PARTITIONS, FLOORS OR ROOFS SHALL BE PROTECTED BY STEEL SLEEVES THROUGH FULL THICKNESS OF CONSTRUCTION. ALLOW 1/2 INCH CLEARANCE AROUND PIPE OR COVERING AND TERMINATE FLUSH WITH FINISH SURFACE EXCEPT IN ROOMS CONTAINING FLOOR DRAINS OR IN WATERPROOFED FLOORS. SLEEVES IN FLOORS WITH DRAINS SHALL TERMINATE 1-1/2 INCHES ABOVE THE FLOOR. SLEEVES IN WATERPROOFED SLABS SHALL EXTEND SUFFICIENTLY SO WATERPROOFING CAN BE FLASHED AROUND THE SLEEVE.

B. SLEEVES IN NON-BEARING PARTITIONS, OR NON-LOAD BEARING WALLS MAY BE 22 GAUGE SHEET STEEL OR HOLE-OUTS. IN BEARING WALLS, WATERPROOFED FLOORS, OR ROOFS, THEY SHALL BE SCHEDULE 40 STEEL PIPE WITH FINISHED ENDS.

C. CAULK SLEEVES IN FLOOR WITH FIREPROOF MINERAL WOOL AND SEAL ENDS WITH FIREPROOF CALKING COMPOUND TO SEAL SPACE BETWEEN PIPE OR COVERING. AND THE SLEEVE. SLEEVES IN ROOF SHALL BE FLASHED AND MADE WATERTIGHT. PACK SLEEVES PASSING THROUGH FIRE WALLS OR FIRE RATED FLOORS WITH FIREPROOF MINERAL WOOL AND SEAL ENDS WITH NON-HARDENING FIREPROOF CALKING COMPOUND.

D. SLEEVES SHALL BE INSTALLED AND SECURELY FASTENED IN THEIR PROPER POSITION BY EACH SPECIALTY CONTRACTOR FOR HIS OWN WORK, WHO SHALL BE RESPONSIBLE FOR FINAL LOCATION.

3.7 ESCUTCHEONS:

A. PROVIDE CHROME PLATED METAL ESCUTCHEONS WITH FASTENING DEVICES ON ALL PIPES PASSING THROUGH FINISHED WALL SURFACES AND FINISHED CEILING SURFACES. PROVIDE WITH SET SCREWS. SPACES WHICH ARE PAINTED, PANELED OR HAVING OTHER DECORATIVE WALL FINISH SHALL BE CONSIDERED "FINISHED ROOMS".

3.8 UNIONS:

A. UNIONS BETWEEN PIPING OF DIFFERENT MATERIALS SHALL BE PROVIDED WITH DIELECTRIC UNIONS OR FLANGES.

3.9VALVES:

A. SHUTOFF VALVES SHALL ALSO BE INSTALLED IN BRANCH LINES TO RISERS DROPPING IN WALLS, PARTITIONS, OR CHASES. VALVES SHALL HAVE PAD LOCK FEATURE

B. ALL VALVES DESIGNED FOR SOLDERING SHALL BE PROTECTED FROM HEAT AS RECOMMENDED BY MANUFACTURER TO PROTECT SEALS.

3.10 PIPE IDENTIFICATION:

A. FOLLOW MANUFACTURER'S INSTRUCTIONS FOR INSTALLATION AND SECURING LABELS AND FLOW ARROWS TO PIPING.

3.11 HANGERS AND SUPPORTS:

A. FURNISH ALL MATERIALS REQUIRED FOR THE PROPER SUPPORT OF EQUIPMENT AND PIPING INSTALLED HEREIN. EACH HANGER SHALL BE SUITABLE TO MEET THE STRUCTURAL, TEMPERATURE, PIPE MATERIAL AND EXPANSION CONDITIONS ENCOUNTERED. SELECTION AND APPLICATION SHALL BE IN ACCORDANCE WITH ANSI/MSS SP-69.

B. CLAMPS, INSERTS, BOLTS, CHANNEL AND ANGLE IRON, RACKS, ROLLERS, ETC., SHALL BE FURNISHED FOR PIPING AND EQUIPMENT SUPPORTS AS REQUIRED. ALL HANGER AND SUPPORT COMPONENTS SHALL BE ADEQUATE FOR THE LOADS INVOLVED.

C. VERTICAL PIPING SHALL BE SUPPORTED WITH RISER CLAMPS OR OTHER SATISFACTORY MEANS AS DICTATED BY THE PARTICULAR SITUATION AND AS RECOMMENDED BY THE HANGER MANUFACTURER. SPECIAL SITUATIONS SHALL BE TAKEN CARE OF AS DICTATED BY GOOD PRACTICE. BASE OF EACH STACK SHALL BE SUPPORTED WITH CONCRETE BASE SUPPORT.

D. EQUIPMENT SHALL BE SUPPORTED ADEQUATELY WITH ALL BRACING, FOUNDATIONS, ANGLES, CHANNELS, HANGERS, ETC.

E. SPECIALLY DESIGNED HANGERS SHALL BE FABRICATED AND INSTALLED PER ANSI/MSS SP-89.

3.12 EXPANSION AND CONTRACTION:

A. ALL PIPING SHALL BE INSTALLED SO AS TO BE FREE FROM STRESS, STRAINS AND DISTORTIONS BY EXPANSION OR CONTRACTION. EXPANSION AND CONTRACTION SHALL BE TAKEN UP BY OFFSETS IN PIPING WITH REQUIRED ANCHORS, EXPANSION LOOPS AND JOINTS, ETC., ALL TO MEET WITH GOOD ACCEPTED PRACTICES, WHETHER SPECIFICALLY INDICATED OR NOT. INSTALL ANCHORS OF SUITABLE DESIGN AND ADEQUATE STRENGTH FOR GUIDANCE OF PIPING SUBJECTED TO EXPANSION AND CONTRACTION DUE TO TEMPERATURE CHANGES. ANCHORS SHALL BE SECURELY ATTACHED TO THE BUILDING FRAME.

3.13 HANGER LOCATIONS:

A. HANGER LOCATIONS FOR GENERAL SERVICE STEEL AND COPPER PIPING SHALL NOT EXCEED A DISTANCE OF 2 FEET 6 INCH FROM A POINT OF CHANGE IN PIPING DIRECTION AND SHALL BE SPACED IN ACCORDANCE WITH THE FOLLOWING SCHEDULE:

1. INSULATED PIPE WITH VAPOR JACKET:

PIPE SIZE	MAXIMUM SPACING STEEL PIPE	MAXIMUM SPACING COPPER PIPE
1" AND SMALLER	10	5
1-1/4" TO 2-1/2"	10	8
3" AND LARGER	10	10

2. UNINSULATED PIPE:

PIPE SIZE	STEEL PIPE WATER SERVICE	STEEL PIPE VAPOR SERVICE	COPPER PIPE WATER SERVICE	COPPER PIPE VAPOR SERVICE
1/2" AND SMALLER	7	8	5	6
3/4"	7	9	5	7
1"	7	9	6	8
1-1/4"	7	9	7	9
1-1/2"	9	12	8	10
2"	10	13	8	11
2-1/2"	11	14	9	13
3"	12	15	10	14
4"	14	17	12	16
6" AND LARGER	17	21	14	20

ADDITIONAL SUPPORTS SHALL BE PROVIDED AT ALL CHANGES OF DIRECTION AND FOR CONCENTRATED LOADS SUCH AS VALVES.

B. HANGERS SHALL BE SUSPENDED FROM MILD STEEL RODS SIZED IN ACCORDANCE WITH THE FOLLOWING TABLE:

PIPE SIZE (INCHES)	ROD DIAMETER (INCHES)
2 OR SMALLER	3/8
2-1/2 TO 3	1/2
4 TO 5	5/8
6 AND LARGER	3/4

3.14 AS-BUILT DRAWINGS:

A. MAKE ALL NECESSARY MEASUREMENTS OF THE ACTUAL INSTALLED LOCATIONS OF THE INSTALLED SYSTEMS AND COMPONENTS AS THE WORK PROGRESSES AND KEEP ACCURATE RECORDS OF THESE FIELD MEASUREMENTS. SHOW LOCATIONS BY DIMENSION FROM PERMANENT, READILY IDENTIFIABLE REFERENCE POINTS SUCH AS BUILDING WALLS, COLUMNS, ETC., UPON COMPLETION OF THE PROJECT, DELIVER TO THE OWNER MARKED TRACINGS SHOWING THE ACTUAL INSTALLED LOCATIONS, DEPTHS AND SIZES OF ALL INSTALLED COMPONENTS.

MECHANICAL GENERAL NOTES

A. CONTRACTOR SHALL VISIT THE SITE AND BECOME FAMILIAR WITH THE PROJECT SCOPE, UTILITY CONNECTIONS, AND ALL BUILDING SERVICES.

B. STANDARD DETAILS ILLUSTRATED ON THE DRAWINGS SHALL BE APPLIED IN ALL CASES WHERE THE FEATURE OCCURS IN THE SYSTEM DESIGN.

C. MAJOR EQUIPMENT SHOWN ON THE PLANS AND ELEVATIONS ILLUSTRATE THE GENERAL ARRANGEMENT AND SPACE ALLOCATIONS. THE CONTRACTOR SHALL VERIFY THE SPACE REQUIREMENTS FOR EACH SYSTEM COMPONENT USING MANUFACTURER CERTIFIED SHOP DRAWINGS AND MAKE THE NECESSARY ADJUSTMENTS IN EQUIPMENT PLACEMENT AND CONNECTION IN ORDER TO ACCOMMODATE THE EXACT EQUIPMENT TO BE INSTALLED.

D. SUPPORTS, ANCHOR BOLTS, AND HANGERS FOR ALL EQUIPMENT SPECIFIED IN DIVISION 23 SHALL CONFORM TO THE SPECIFICATIONS. MISCELLANEOUS STEEL BRACING SUPPORTS AND REINFORCING STEEL NEEDED TO SUPPORT EQUIPMENT SPECIFIED IN DIVISION 23 SHALL BE PART OF THE SCOPE OF WORK OF DIVISION 23.

E. DUCTWORK AND PIPING 4" AND LARGER ROUTED PARALLEL TO A RATED WALL SHALL BE INSTALLED WITH A MINIMUM 6" CLEARANCE TO ALLOW FOR INSPECTION OF WALL PENETRATIONS.

F. DUCTWORK STORED ON-SITE AWAITING INSTALLATION SHALL REMAIN PROPERLY SEALED AND PROTECTED. OPEN ENDS OF DUCTWORK SHALL BE CAPPED AND SEALED AFTER INSTALLATION.

G. DRAWINGS ARE SCHEMATIC IN NATURE AND SHALL NOT BE SCALED. THE CONTRACTOR IS RESPONSIBLE FOR COORDINATING EXACT ROUTING OF ALL SERVICES WITH EXISTING CONDITIONS AND WITH ALL OTHER TRADES. REFER TO SPECIFICATIONS FOR COORDINATION DRAWING REQUIREMENTS.

H. OUTSIDE AIR INTAKES SHALL BE A MINIMUM OF 10 FEET AWAY FROM PLUMBING VENTS, EXHAUST VENTS, AND OTHER SOURCES OF NOXIOUS FUMES AND/OR ODORS. INTAKES SHALL BE A MINIMUM OF 36" ABOVE FINISHED ROOF AND 72" ABOVE FINISHED GRADE.

I. EQUIPMENT CALLED FOR BY NAME AND MODEL NUMBER FORMS THE STANDARD FOR SELECTION. EQUIPMENT MEETING OR EXCEEDING THAT SPECIFIED MAY BE SUBMITTED FOR APPROVAL.

MECHANICAL LEGEND

(NOT ALL SYMBOLS MAY BE USED)

DUCTWORK

SYMBOL / ABBREVIATION	DESCRIPTION	SYMBOL / ABBREVIATION	DESCRIPTION
	RECTANGULAR RETURN / EXHAUST DUCT - UP	12"X12" FACE / 24"X24" FACE	SUPPLY DIFFUSER AND AIR QUANTITY. BLANK OUTS INDICATE THROW IN THIS DIRECTION. (X DENOTES TYPE. SEE NOTE 1 OF AIR DISTRIBUTION DEVICE SCHEDULE)
	RECTANGULAR RETURN / EXHAUST DUCT - DOWN	SX	
MVD	MANUAL VOLUME DAMPER	RX	RETURN GRILLE AND AIR QUANTITY (X DENOTES TYPE)
		EX	EXHAUST GRILLE AND AIR QUANTITY (X DENOTES TYPE)
	TRANSITION	CFM	AIRFLOW TRANSFER RATE AT DOOR
	RADIUS ELBOW	AD	ACCESS DOOR
		AFF	ABOVE FINISHED FLOOR
		BOD	BOTTOM OF DUCT
	SQUARE THROAT ELBOW WITH TURNING VANES	BOP	BOTTOM OF PIPE
		CS	COLD DECK SUPPLY
		DDC	DIRECT DIGITAL CONTROL
	BRANCH DUCT CONNECTION RECTANGULAR OR ROUND BRANCH. RECTANGULAR TRUNK. MVD REQUIRED TO AIR DEVICES	MVD	MANUAL VOLUME DAMPER
		OA	OUTSIDE AIR
R/D R/D	RISE/DROP IN ELEVATION	RA	RETURN AIR
		SA	SUPPLY AIR
	BRANCH DUCT CONNECTION CONICAL TEE AND TAP ROUND TRUNK.	SO	SCREENED OPENING
		SWR	SIDEWALL REGISTER
	BRANCH DUCT CONNECTION BEVELED TEE. ROUND TRUNK. MVD REQUIRED TO AIR DEVICES.	SWG	SIDEWALL GRILLE
		UNO	UNLESS NOTED OTHERWISE
		WALL MOUNTED CONTROL DEVICES	
		T	THERMOSTAT OR TEMP SENSOR

System No. W-L-5096

F Ratings - 1 and 2 Hr (See Item 1 and 3)

T Ratings - 0,1/2 and 1 Hr (See Items 1, 3 and 4)

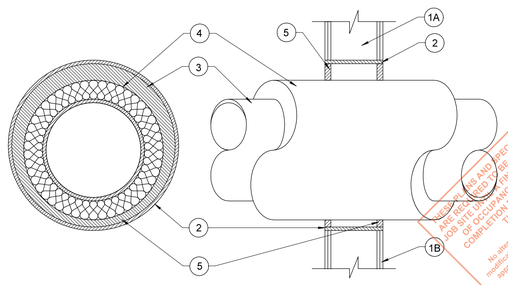

SECTION A-A

1. **Wall Assembly** The 1 or 2 hr fire rated wallboard/stud wall assembly shall be constructed of the materials and in the manner specified in the individual U300 or U400 Series Wall and Partition Designs in the UL Fire Resistance Directory and shall include the following construction features:

A. **Studs** Wall framing shall consist of either wood studs or steel channel studs. Wood studs to consist of nom 2 by 4 in. lumber spaced 16 in. OC. Steel studs to be min 2-1/2 in. wide and spaced max 24 in. OC.

B. **Gypsum Board*** Nom 5/8 in. thick, 4 ft wide with square or tapered edges. The gypsum board type, thickness, number of layers, fastener type and sheet orientation shall be as specified in the individual U300 or U400 Series Design in the Fire Resistance Directory. Max dia. of openings is 14-1/2 in. for wood stud walls. Max dia. of opening is 18 in. for steel studs walls. **The hourly F and T Ratings of the firestop system is equal to the hourly fire rating of the wall assembly in which it is installed.**

2. **Steel Sleeve** (Optional) Max 18 in. dia. Schedule 40 (or heavier) steel pipe sleeve inserted in nom 18 in. dia. circular opening core drilled through wall. Length of steel sleeve to be equal to thickness of wall.

3. **Through Penetrant** One metallic pipe or tubing installed concentrically or eccentrically within the firestop system. Pipe or tube to be rigidly supported on both sides of wall assembly. The following types and sizes of metallic pipes or tube may be used:

A. **Steel Pipe** Nom 12 in. dia. (or smaller) Schedule 40 (or heavier) steel pipe.
When steel pipe is used, T Rating is 1/2 hr.

B. **Copper Tube** Nom 6 in. dia. (or smaller) Type L (or heavier) copper tube.
When copper tube is used, T Rating is 1/2 hr and 1 hr when installed in 1 and 2 hr rated walls, respectively.

C. **Copper Pipe** Nom 6 in. dia. (or smaller) Regular (or heavier) copper pipe.
When copper pipe is used, T Rating is 1/2 and 1 hr when installed in 1 and 2 hr rated walls respectively.

4. **Pipe Covering*** Max. 2 in. thick hollow cylindrical heavy density (min 3.5 pcf) glass fiber units, jacketed on the outside with an all service jacket. Longitudinal joints sealed with metal fasteners or factory-applied SSL tape. Transverse joints secured with metal fasteners or with butt tape supplied with the product. When pipe covering thickness is less than 2 in., T Rating is 0 hr.

See **Pipe and Equipment Covering-Materials** (BRGU) category in the Building Materials Directory for names of manufacturers. Any pipe covering material meeting the above specifications and bearing the UL Classification Marking with a Flame Spread Index of 25 or less and a Smoke Developed Index of 50 or less may be used. The annular space of the firestop system is dependent on the type and size of the through penetrant as shown in the table below:

Through Penetrant		Annular Space	
Type	Max. dia. In.	Min In.	Max In.
A	12	0	1/2
B or C	6	0	1-7/8

5. **Fill, Void or Cavity Material*-Sealant** Min 5/8 in. or thickness of fill material applied within annulus, flush with both surfaces of wall assembly for At point contact an additional 1/2 in. bead of sealant shall be applied to the insulated pipe/ wall interface.

HILTI CONSTRUCTION CHEMICALS, DIV OF HILTI INC -- FS-ONE Sealant
*Bearing the UL Classification Mark

NO CHANGES TO THE SPECIFICATIONS AND/OR SPECIFICATIONS ARE PERMITTED WITHOUT THE WRITTEN CONSENT OF THE TENNESSEE DEPARTMENT OF TRANSPORTATION. UNLESS FINAL SEALED AS-BUILT DRAWINGS ARE RECEIVED BY THE DEPARTMENT AT THE JOB SITE, THE DEPARTMENT WILL NOT ISSUE A CERTIFICATE OF OCCUPANCY OR SUBSTANTIAL COMPLETION FORM TO CONTRACTOR UNTIL THIS OPTION IS EXERCISED.
No alterations or changes, in any manner, to this document may be made without the written consent of the TENNESSEE DEPARTMENT OF TRANSPORTATION.

INSULATED METAL PIPE THROUGH SLEEVE IN 1-HR OR 2-HR WALL | 06

PROJECT NO.	39999-3609-04
PIN NO.	131121.0

REVISIONS

DESCRIPTION	BY	DATE

TDOT HENDERSON COUNTY MAINTENANCE BUILDING
370 ROCK MILAM ROAD
CEDAR GROVE, TN 38321

PHASE: CONSTRUCTION
DATE: AUGUST 18, 2023

Wold HFR DESIGN
214 Centerview Drive Suite 300
Brentwood, TN 37027
woldae.com phone: 615.370.8500
fax: 615.370.8530

SSR Smith Seckman Reid, Inc.
2650 Thousand Oaks Boulevard, Suite 4200
Memphis, TN 38118
(901) 683-3900
FAX: (901) 683-3990
www.ssr-inc.com
SSR Project #: 22640620

SEALED BY

WALTER E. BLACK REGISTERED ENGINEER AGRICULTURE COMMERCE No. 104824 STATE OF TENNESSEE
05/31/2023

STATE OF TENNESSEE
DEPARTMENT OF
TRANSPORTATION

MECHANICAL SPECIFICATIONS

M0.2

SHEET 20 OF 34

FIELD SET TFM# 21349 PROJECT# 2024-04-17-10

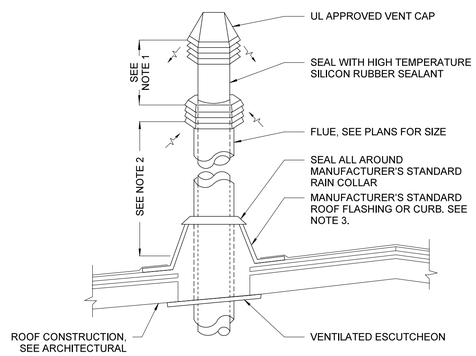

NOTES:
1. EXTEND 16" MINIMUM, USE MANUFACTURER'S RECOMMENDATION FOR ACTUAL INSTALLATION.
2. 12" MIN. USE MANUFACTURER'S RECOMMENDATIONS FOR ACTUAL INSTALLATION.
3. FLASHING ON CURB SHALL BE BY METAL BUILDING MANUFACTURER WHERE INSTALLED ON NEW METAL ROOF.

SEALED COMBUSTION FLUE THROUGH METAL BUILDING ROOF — 01

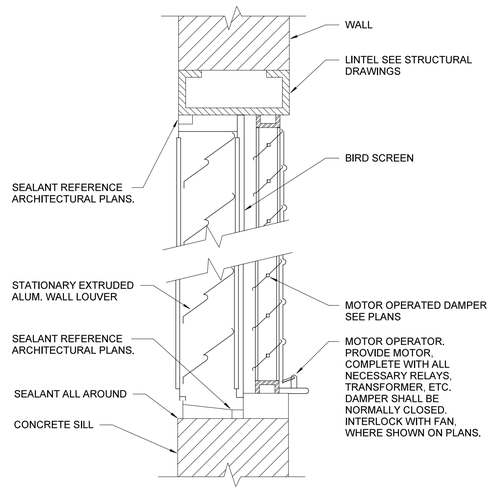

NOTE:
1. CONTRACTOR SHALL FIELD VERIFY LOUVER OPENING SIZES.
2. COORDINATE WATER-PROOFING REQUIREMENTS WITH ARCHITECTURAL DETAILS.

WALL LOUVER AND DAMPER — 02

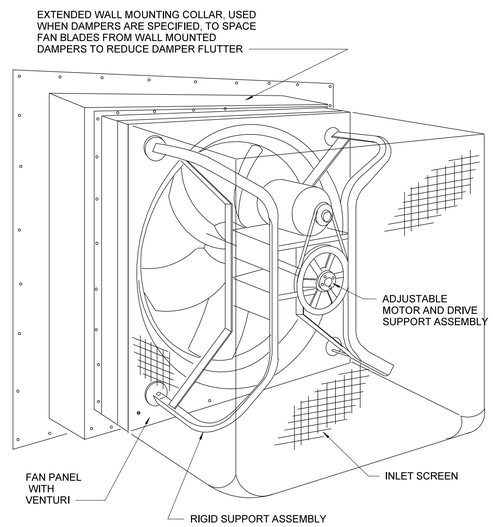

NOTES:
1. REFER TO FAN SCHEDULE FOR FAN ACCESSORIES.
2. BELT DRIVEN FAN SHOWN, DETAIL IS SIMILAR FOR DIRECT DRIVE FAN.
3. PROVIDE 26 x 26 LOUVER CAPABLE OF EXHAUSTING 5,100 CFM.

WALL MOUNTED PROPELLER FAN — 03

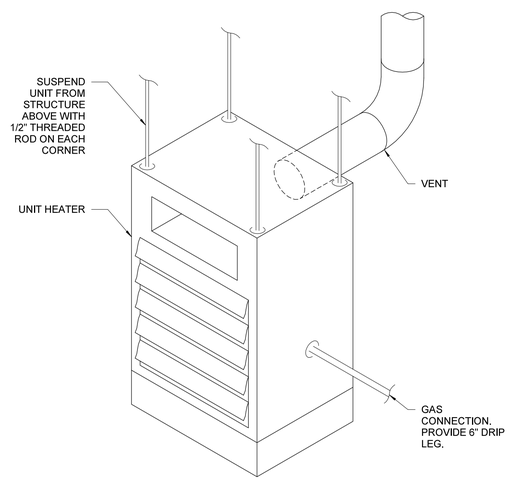

GAS-FIRED UNIT HEATER — 04

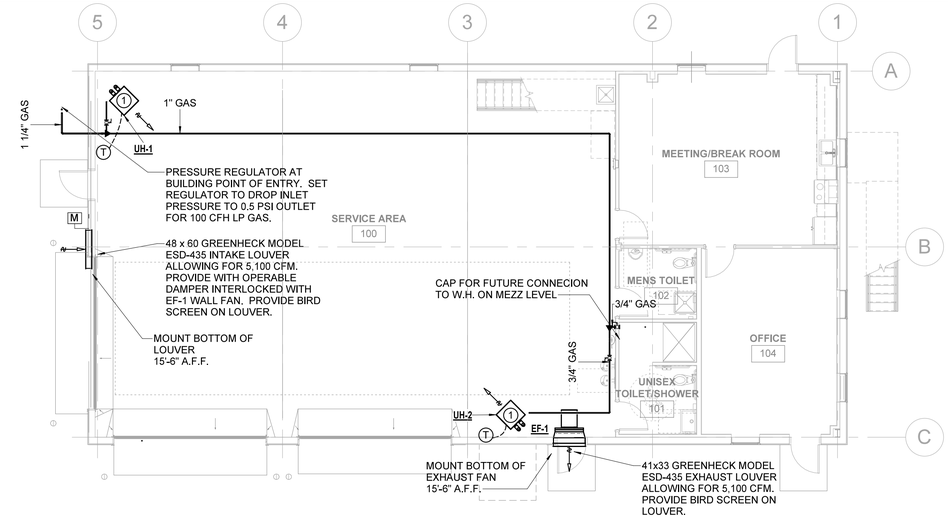

1 MECHANICAL PLAN - CORE & SHELL

1/8" = 1'-0"

SHEET KEYED NOTES

1. PROVIDE WALL MOUTED TSTAT AND CONCENTRIC VENT TERMINATION KIT. SIZE PER MANUFACTURERS RECOMMENDATION.

INTERIOR WALL TYPES

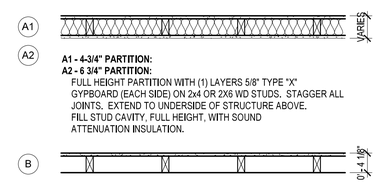

EXTERIOR WALL TYPES

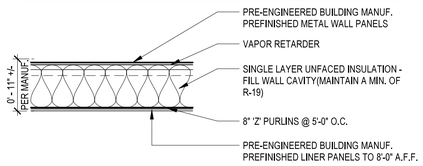

UNIT HEATER SCHEDULE

GENERAL NOTES:
1. SEE SPECIFICATIONS.
2. PIPE CONNECTIONS SIZES PER PLANS.
3. SEE ELECTRICAL DRAWINGS FOR STARTER AND LOCATION.

UNIT TYPES:
VERTICAL
HORIZONTAL

MOTOR TYPES:
PSC - PERMANENT SPLIT-CAPACITOR.
ECM - ELECTRONICALLY COMMUTATED MOTOR.

DESIGNATION	TYPE	MANUFACTURER	MODEL NUMBER	MIN. CAPACITY (BTUH)	CFM	KW	LP GAS INPUT (BTUH)	MOTOR		ELECTRICAL		
								HP	TYPE	VOLT/PH	FLA	MOCP
UH-1	LP GAS	REZNOR	UDX-75	0.0	961	0	75,000	0.06		115/1	3.3	15
UH-2	LP GAS	REZNOR	UDX-75	0.0	961	0	75,000	0.06		115/1	3.3	15

FAN SCHEDULE

GENERAL NOTES:
1. MOTOR H.P. SHALL COMPLY WITH ASHRAE 90.1.
2. BHP SHALL BE NO GREATER THAN 90% OF THE MOTOR H.P.

DESIGNATION	SERVICE	MANUFACTURER	MODEL NUMBER	TYPE	CFM	ESP (IN. WG)	MOTOR					MAX. SONES	ROOF / WALL OPENING	OPERATING WEIGHT (LBS)
							BHP	MIN. HP	RPM	VOLTAGE	PHASE			
EF-1	CORE	GREENHECK	AER-E30C-310-VG	PROP	5,100	0.5	---	2	1,725	240	1	27	39.75x39.75	319

THESE PLANS AND SPECIFICATIONS ARE INTENDED FOR USE ON THE JOB SITE DURING THE PERIOD OF CONSTRUCTION OF THE PROJECT INDICATED BY THIS OFFICE. Reproductions, copies or any kind of use of this design without written permission of this office is in violation of the laws of the United States, NARSIMAL'S OFFICE

PROJECT NO.	39999-3609-04
PIN NO.	131121.0

REVISIONS

DESCRIPTION	BY	DATE

TDOT HENDERSON COUNTY MAINTENANCE BUILDING
370 ROCK MILAM ROAD
CEDAR GROVE, TN 38321

DATE AUGUST 18, 2023
PHASE CONSTRUCTION

FIELD SET TFM# 21349 PROJECT# 2024-04-17-10

Wold HFR DESIGN
214 Centerview Drive Suite 300
Brentwood, TN 37027
woldae.com phone: 615.370.8500
fax: 615.370.8530

SSR Smith Seckman Reid, Inc.
2650 Thousand Oaks Boulevard, Suite 4200
Memphis, TN 38118
(901) 683-3900
FAX: (901) 683-3990
www.ssr-inc.com
SSR Project #: 22640620

SEALED BY

STATE OF TENNESSEE
DEPARTMENT OF TRANSPORTATION

MECHANICAL CORE & SHELL

M1.0

SHEET 21 OF 34

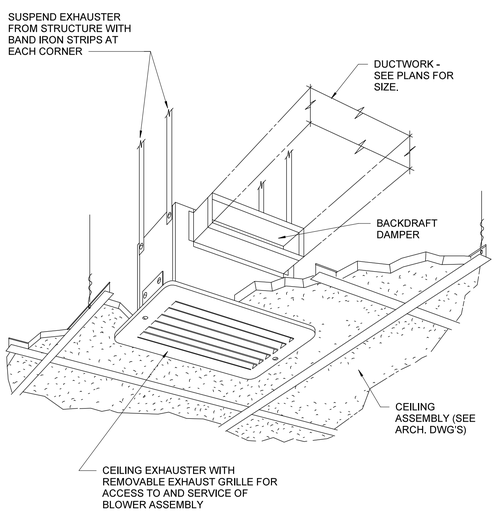

CEILING MOUNTED EXHAUST FAN | 08

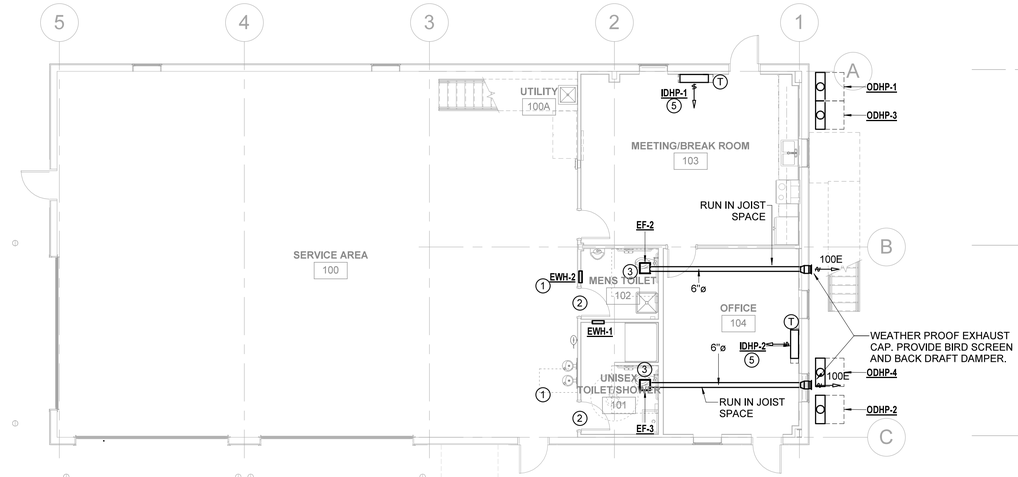

2 MECHANICAL PLAN - FIRST FLOOR
1/8" = 1'-0"

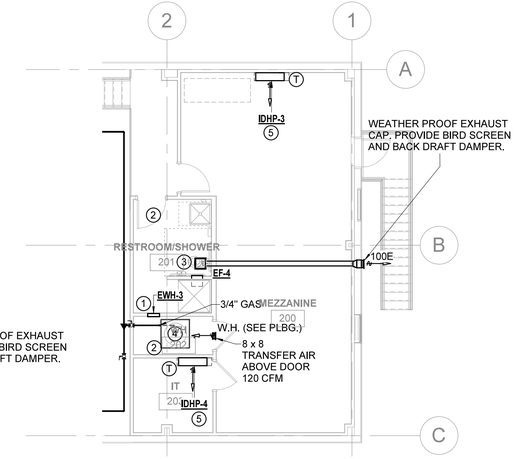

1 MECHANICAL PLAN - MEZZ
1/8" = 1'-0"

SHEET KEYED NOTES

1. PROVIDE WALL HEATER EQUAL TO QMARK AWH3150F OR APPROVED EQUAL. UNIT SHALL BE 120/1/60 AND PROVIDE 1.5 KWHEAT. PROVIDE RECESSED WALL MOUNT KIT AND SURFACE MOUNTED CONTROLS.
2. PROVIDE 3/4" UNDERCUT ON DOORS.
3. INTERLOCK WITH LIGHT SWITCH
4. VENT W.H. UP THRU ROOF AND SIZE AS PER MANUFACTURER'S RECOMMENDATIONS.
5. REFER TO PLUMBING DRAWINGS FOR CONDENSATE TO DRY WELL.

INTERIOR WALL TYPES

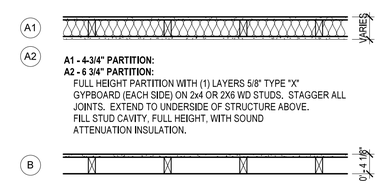

A1 - 4-3/4" PARTITION:
A2 - 6 3/4" PARTITION:
FULL HEIGHT PARTITION WITH (1) LAYERS 5/8" TYPE "X" GYPBOARD (EACH SIDE) ON 2x4 OR 2X6 WD STUDS. STAGGER ALL JOINTS. EXTEND TO UNDERSIDE OF STRUCTURE ABOVE. FILL STUD CAVITY, FULL HEIGHT, WITH SOUND ATTENUATION INSULATION.

4-1/8" PARTITION:
FULL HEIGHT PARTITION WITH (1) LAYERS 5/8" TYPE "X" GYPBOARD (ONE SIDE) ON 2x4 WD STUDS. STAGGER ALL JOINTS. EXTEND TO UNDERSIDE OF STRUCTURE ABOVE.

EXTERIOR WALL TYPES

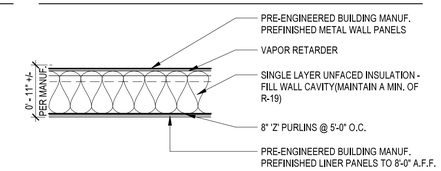

FAN SCHEDULE

GENERAL NOTES:
1. MOTOR H.P. SHALL COMPLY WITH ASHRAE 90.1.
2. BHP SHALL BE NO GREATER THAN 90% OF THE MOTOR H.P.

DESIGNATION	SERVICE	MANUFACTURER	MODEL NUMBER	TYPE	CFM	ESP (IN. WG)	MOTOR					MAX. SONES	ROOF / WALL OPENING	OPERATING WEIGHT (LBS)
							BHP	MIN. HP	RPM	VOLTAGE	PHASE			
EF-2	RESTROOM	GREENHECK	SP-110-VG	CEILING	100	0.125	---	8W	940	115/60	1	1.4	---	12
EF-3	RESTROOM	GREENHECK	SP-110-VG	CEILING	100	0.125	---	8W	940	115/60	1	1.4	---	12
EF-4	RESTROOM	GREENHECK	SP-110-VG	CEILING	100	0.125	---	8W	940	115/60	1	1.4	---	12

SPLIT SYSTEM HEAT PUMP SCHEDULE

GENERAL NOTES:
1. SEE SPECIFICATIONS.
2. PIPE CONNECTIONS SIZES PER PLANS.
3. CONTROL SEQUENCE PER DRAWINGS.
4. 1" PLEATED FILTER.
5. SEE ELECTRICAL DRAWINGS FOR STARTER, DISCONNECT AND LOCATION.
6. REFRIGERANT LINE SIZES PER MANUFACTURER'S REQUIREMENTS.
7. COOLING CAPACITY AND SEER BASED ON 95°F.
8. HEATING CAPACITY AND HSPF BASED ON 17°F.
9. UNITS SHALL BE SELECTED TO OPERATE AT AN ALTITUDE OF XXXX FT.

UNIT TYPES:
VERTICAL
HORIZONTAL

MOTOR TYPES:
PSC - PERMANENT SPLIT-CAPACITOR.
ECM - ELECTRONICALLY COMMUTATED MOTOR.

THESE PLANS AND SPECIFICATIONS ARE REQUIRED TO BE KEPT ON THE JOB SITE UNTIL A FINAL CERTIFICATE OF OCCUPANCY OR CERTIFICATE OF COMPLETION FOR A PROJECT IS ISSUED BY THE OFFICE OF FIRE STATE FIRE MARSHAL'S OFFICE.
Illustrations, diagrams, additions or modifications of any kind are allowed to this approved set without written permission of this office.

DESIGNATION	MANUFACTURER	MODEL NO.		UNIT HSPF	UNIT EER	CFM	OA CFM	ESP (IN. WG)	TSP (IN. WG)	FAN MOTOR		COOLING			HEATING								CONDENSING UNIT						
		INDOOR UNIT	CONDENSING UNIT							W	VOLT/PH	EAT DB/WB (° F)	LAT DB/WB (° F)	TOTAL CAPACITY (BTUH)	MAX. CAPACITY 17°F (BTUH)	EAT DB (° F)	LAT DB (° F)	AUX KW	KW / STEP	MCA	MOCP	VOLT/PH	DESIGN AMBIENT	FAN FLA	COMPRESSOR RLA	VOLT/PH	MOCP	MCA	REFRIG.
IDHP-1/ODHP-1	MITSUBISHI	MSZ-HM12NA	MUZ-HM12NA	10	9.9	400	0	0	0	30	208/1	-	-	12200	9000	-	-	-	-	12	15	208/230/1	95	0.5	6.6	208/1	15	12	R410A
IDHP-2/ODHP-2	MITSUBISHI	MSZ-HM09NA	MUZ-HM09NA	10	12	400	0	0	0	30	208/1	-	-	10000	7200	-	-	-	-	9	15	208/230/1	95	0.5	6.2	208/1	15	9	R410A
IDHP-3/ODHP-3	MITSUBISHI	MSZ-HM12NA	MUZ-HM12NA	10	9.9	400	0	0	0	30	208/1	-	-	12200	9000	-	-	-	-	12	15	208/230/1	95	0.5	6.6	208/1	15	12	R410A
IDHP-4/ODHP-4	MITSUBISHI	MSZ-HM09NA	MUZ-HM09NA	10	12	400	0	0	0	30	208/1	-	-	10000	7200	-	-	-	-	9	15	208/230/1	95	0.5	6.2	208/1	15	9	R410A

PROJECT NO.	39999-3609-04
PIN NO.	131121.0

REVISIONS

DESCRIPTION	BY	DATE

TDOT HENDERSON COUNTY MAINTENANCE BUILDING
370 ROCK MILAM ROAD
CEDAR GROVE, TN 38321

PHASE: CONSTRUCTION
DATE: AUGUST 18, 2023

Wold HFR DESIGN
214 Centerview Drive Suite 300
Brentwood, TN 37027
woldae.com phone: 615.370.8500
fax: 615.370.8530

SSR Smith Seckman Reid, Inc.
2650 Thousand Oaks Boulevard, Suite 4200
Memphis, TN 38118
(901) 683-3900
FAX: (901) 683-3990
www.ssr-inc.com
SSR Project #: 22640620

SEALED BY

STATE OF TENNESSEE
DEPARTMENT OF TRANSPORTATION

MECHANICAL FIRST FLR./ MEZZ.BUILD-OUT
M1.1

FIELD SET TFM# 21349 PROJECT# 2024-04-17-10

ALL PLUMBING LEGEND

NOT ALL SYMBOLS MAY BE USED

SYMBOL	ABB.	DESCRIPTION
—CW— CW	CW	DOMESTIC COLD WATER
- - -CW- - - CW	CW	DOM. COLD WATER (BELOW)
—HW— HW	HW	DOMESTIC HOT WATER
- - -HW- - - HW	HW	DOMESTIC HOT WATER (BELOW)
—HWR— HWR	HWR	DOMESTIC HOT WATER RECIRC.
- -HWR- - - HWR	HWR	DOMESTIC HOT WATER RECIRC. (BELOW)
—D— D	D	DRAIN
- - -D- - - D	D	DRAIN (BELOW)
—TP— TP	TP	TRAP PRIMER
—W— W	W	WASTE
- - -W- - - W	W	WASTE (BELOW)
- - -V- - - V	V	SANITARY VENT
		PIPE TURN DOWN
		PIPE TURN UP
		BALL VALVE
		GATE VALVE
		CHECK VALVE
		BALANCING VALVE
		BUTTERFLY VALVE
	PRV	PRESSURE REGULATING VALVE
		SOLENOID VALVE
		STRAINER
		REDUCER
		PIPE GUIDE
		ANCHOR
		PRESSURE GAUGE
		PRESSURE SWITCH WITH DEMAND CHECK FITTING
		THERMOMETER
		CAP/PLUG
	CO	CLEANOUT (ABOVE CEILING)
		UNION
	PR	PRESSURE RELIEF VALVE
		SHOCK ARRESTOR
		HOSE BIBB / WALL HYDRANT
FCO	FCO	FLOOR CLEAN OUT
	WCO	WALL CLEAN OUT
	FD	FLOOR DRAIN
	VTR	VENT THRU ROOF
	I.E.	INVERT ELEVATION
	AFF	ABOVE FINISHED FLOOR

SITE UTILITY NOTES - NEW CONSTRUCTION

A. CONTRACTOR SHALL FIELD VERIFY UTILITY CONNECTIONS TO EXISTING CITY UTILITIES FOR EXACT LOCATIONS, PIPE SIZES, MATERIAL AND DEPTHS. CONFIRM EXACT CONNECTIONS WITH LOCAL AUTHORITIES AND PAY PRESCRIBED FEES. MATERIALS AND INSTALLATION SHALL MEET STATE AND LOCAL CODES AND REQUIREMENTS.

B. CONTRACTOR SHALL COORDINATE ALL TOP CASTING ELEVATIONS ON NEW SANITARY SEWER MANHOLES WITH FINISHED GRADES.

SHOCK ARRESTOR SCHEDULE

GENERAL NOTES:

1. ALL ARRESTORS SHALL BE SIZED AND LOCATED PER PDI STANDARDS.

P.D.I. SYMBOL	FIXTURE UNITS	SIZE	MANUFACTURER	MODEL NUMBER
A	1-11	1/2" NPT	PPP	SC-500
B	12-32	3/4" NPT	PPP	SC-750
C	33-60	1" NPT	PPP	SC-1000
D	61-113	1 1/4" NPT	PPP	SC-1250
E	114-154	1 1/2" NPT	PPP	SC-1500
F	155-330	2" NPT	PPP	SC-2000

PLUMBING GENERAL NOTES

A. CONTRACTOR SHALL VISIT THE SITE AND BECOME FAMILIAR WITH THE PROJECT SCOPE, UTILITY CONNECTIONS AND ALL BUILDING SERVICES. EXISTING SITE UTILITIES SHALL BE FIELD LOCATED FOR EXACT LOCATION AND ELEVATION BEFORE BEGINNING CONSTRUCTION OR DEMOLITION.

B. DRAWINGS SHOW KNOWN EXISTING SERVICES, PIPING, FIXTURES, EQUIPMENT, AND CONNECTIONS IN REASONABLE PROXIMITY. CONTRACTOR SHALL FIELD VERIFY EXACT LOCATIONS AND SIZES. ANY DISCREPANCIES AND / OR DEVIATIONS SHALL IMMEDIATELY BE BROUGHT TO THE ARCHITECTS ATTENTION.

C. COORDINATE WATER, WASTE, VENT, RAIN WATER AND OTHER PIPING WITH ALL TRADES TO AVOID SPACING AND ROUTING PROBLEMS.

D. FIXTURES, EQUIPMENT, CONNECTIONS AND PIPING SHALL BE FURNISHED AND INSTALLED TO MEET OR EXCEED STATE AND LOCAL CODES AND REQUIREMENTS.

E. STANDARD DETAILS ILLUSTRATED ON THE DRAWINGS SHALL BE APPLIED IN ALL CASES WHERE THE FEATURE OCCURS IN THE SYSTEM DESIGN.

F. FURNISH AND INSTALL SHOCK ARRESTORS IN COLD WATER LINES AT CONNECTIONS TO FLUSH VALVES AND QUICK CLOSING VALVES AND AT EACH HOT AND COLD WATER CONNECTION TO FIXTURES.

G. PLUMBING VENTS AND STACKS THROUGH ROOF SHALL BE INSTALLED A MINIMUM OF 25 FEET CLEAR OF HVAC OUTSIDE AIR INTAKES AND ANY OPERABLE WINDOW OR BUILDING OPENING.

H. VENT AND WASTE STACKS LESS THAN THREE INCHES IN DIAMETER SHALL NOT ROUTE THROUGH THE ROOF. PROVIDE INCREASERS ON PIPING BELOW ROOF.

I. PENETRATIONS THROUGH WALLS AND FLOORS SHALL BE SLEEVED, SEALED AND FIRESAFED TO MAINTAIN THE INTEGRITY OF THE WALL AND FLOOR UL FIRE RESISTANCE RATING.

J. DRAWINGS ARE SCHEMATIC IN NATURE AND SHALL NOT BE SCALED. CONTRACTOR IS RESPONSIBLE FOR COORDINATING EXACT ROUTING OF ALL SERVICES WITH EXISTING CONDITIONS AND WITH ALL OTHER TRADES.

K. PROVIDE INSULATION KIT FOR SUPPLIES, TRAP AND DRAIN PIPING FOR ALL HANDICAP ACCESSIBLE LAVATORIES AND SINKS. INSULATION OF PIPING IS NOT REQUIRED WHERE PROTECTIVE SKIRT IS PROVIDED BELOW FIXTURE.

L. PROVIDE HOUSEKEEPING PADS UNDER ALL EQUIPMENT. COORDINATE PAD SIZE AND FLOOR DRAIN LOCATIONS WITH FINAL EQUIPMENT PAD LOCATIONS. LOCATE DRAINS NEAR EQUIPMENT DRAINS AND DISCHARGE TO AVOID ROUTING OF PIPING ACROSS WALK PATHS.

M. SUPPORTS, ANCHOR BOLTS AND HANGERS FOR ALL EQUIPMENT SPECIFIED SHALL CONFORM TO THE SPECIFICATIONS. MISCELLANEOUS STEEL BRACING SUPPORTS AND REINFORCING STEEL NEEDED TO SUPPORT EQUIPMENT AND PIPING SYSTEMS SPECIFIED SHALL BE FURNISHED AND INSTALLED AS PART OF THE WORK.

N. MAINTAIN ACCESSIBILITY OF ALL EQUIPMENT AND VALVES. PROVIDE ACCESS PANELS AS REQUIRED. COORDINATE PLACEMENT WITH THE ARCHITECT PRIOR TO INSTALLATION.

O. INSTALL EXTERIOR WALL HYDRANTS AT 18" ABOVE FINISHED GRADE.

P. CONTRACTOR SHALL COORDINATE WITH THE ARCHITECT PRIOR TO CUTTING ANY OPENING IN THE STRUCTURE. COORDINATE SLEEVING OF BEAMS AND CORING OF STRUCTURE WITH STRUCTURAL DRAWINGS AND DETAILS PRIOR TO INSTALLATION.

Q. CONTRACTOR SHALL PROVIDE TRAP PRIMERS ON ALL FLOOR DRAINS NOT RECEIVING CONSTANT DISCHARGE FROM FIXTURES AND/OR EQUIPMENT AND AS REQUIRED BY STATE AND LOCAL CODES.

R. ALL SANITARY AND STORM WATER PIPING BELOW GRADE IN AREAS SUBJECT TO TRAFFIC WITH LESS THAN TWO FEET OF EARTH COVER SHALL BE DUCTILE IRON.

S. PROVIDE PIPING EXPANSION JOINTS AT EACH PIPE CROSSING AN INTERIOR BUILDING EXPANSION JOINT.

T. ORIENT FLUSH VALVE HANDLES ASSOCIATED WITH BARRIER-FREE WATER CLOSETS ON THE WIDE SIDE OF THE STALL TO COMPLY WITH ADA REQUIREMENTS.

U. PROVIDE LEAD FREE MIXING VALVES UNDER PUBLIC LAVATORIES, KITCHEN HAND WASHING SINKS OR ANY OTHER FIXTURE REQUIRING TEMPERED WATER TO MEET ASSE 1070/ASME A112.1070 OR LOCAL ADOPTED CODE.

A DOUBLE WYE OR DOUBLE COMBINATION WYE AND 1/8 BEND FITTING IS NOT ACCEPTABLE IN A HORIZONTAL POSITION FOR A DRAINAGE SYSTEM.

W. EQUIPMENT AND FIXTURES CALL FOR BY NAME AND MODEL NUMBER FORM THE STANDARD FOR SELECTION. EQUIPMENT AND FIXTURE MEETING OR EXCEEDING THAT SPECIFIED SHALL BE SUBMITTED FOR APPROVAL.

DRAINS SCHEDULE

TYPE	DESCRIPTION	CW	HW	DR	VENT
ICO WCO	INTERIOR CLEAN-OUT - ZURN Z-1400-T WITH FLANGE & C.C. (SIZE TO MATCH LINE SERVED)	-	-	-	-
FD-1	FLOOR DRAIN (3" DIA. OUTLET) - JR SMITH MODEL 2005-B WITH ADJUSTABLE ROUND STRAINER HEAD, FLASHING COLLAR AND P-TRAP. PROVIDE TRAP PRIMER.	-	-	3"	2"
FD-2	SHOWER DRAIN (2" DIA. OUTLET) - JR SMITH MODEL 220-10 SERIES WITH ADJUSTABLE ROUND STRAINER HEAD, FLASHING COLLAR AND P-TRAP.	-	-	2"	2"
TP	TRAP PRIMERS - PRECISION PLUMBING PRODUCTS INC. PR-500 TRAP PRIMER VALVE - INSTALL IN NEARBY COLD WATER LINE - PROVIDE ONE VALVE PER TRAP OR VALVES WITH DISTRIBUTION UNITS AS REQUIRED TO SERVE ALL FLOOR DRAINS AND OTHER NOTED LOCATIONS	1/2"	-	-	-

HOSE BIBB SCHEDULE

TYPE	DESCRIPTION	CW	HW	DR	VENT
NFHB-1 P-19A	NONFREEZE HOSE BIBB 1. ZURN MODEL Z-1321 WITH ANTI-SIPHON, BACKFLOW PREVENTER, AUTOMATIC DRAINING, KEY OPERATED REFER ARCHITECT DRAWINGS FOR WALL THICKNESS. 2. MOUNTING HEIGHT: 18" ABOVE FINISHED FLOOR/GRADE	3/4"			

THESE PLANS AND SPECIFICATIONS ARE BEING MADE AVAILABLE ON THE JOB SITE UNDER THE FOLLOWING CONDITIONS: THAT THEY ARE TO BE KEPT ON THE JOB SITE DURING CONSTRUCTION AND THAT THEY ARE NOT TO BE REPRODUCED OR ISSUED BY THIS OFFICE.
TENNESSEE STATE FIRE MARSHAL'S OFFICE
No alterations, deletions, additions or applications of any kind are allowed to this plan without written permission of this office.

SHEET INDEX - PLUMBING

NUMBER	SHEET NAME
P0.1	NOTES, LEGENDS & SCHEDULES
P1.0	PLUMBING CORE & SHELL
P1.1	PLUMBING FIRST FLR./ MEZZ.BUILD-OUT
P2.0	PLUMBING DETAILS

PLUMBING FIXTURE CONNECTION SCHEDULE

NOTES:

1. BRANCH CONNECTION SIZES ARE INDICATED. REFER TO FLOOR PLANS FOR MAIN PIPING SIZES.
2. PROVIDE MIXING VALVE CONFORMING TO ASSE 1070 OR CSA B125.3 UNDER HAND SINK/LAV....

FIXTURE TAG	FIXTURE DESCRIPTION	COLD WATER	HOT WATER	DRAIN	VENT	NOTES
FD-1	SEE DRAIN SCHEDULE	--	--	--	--	1.
FD-2	SEE DRAIN SCHEDULE	--	--	--	--	1.
P-1	WATER CLOSET (FLOOR MOUNTED - FLUSH VALVE - 1.6 GPF) A. FIXTURE:AMERICAN STANDARD #2858.016, WHITE ELONGATED BOWL B. VALVE: ZURN Z6000AV-WS1 1.6 GALLON PER FLUSH C. SEAT: AMERICAN STANDARD #5901.100 WHITE OPEN FRONT D. TRIM: WAX RING, TWO BOLT CAPS INCLUDED	1"	--	4"	2"	
P-1A	WATER CLOSET (FLOOR MOUNTED - FLUSH VALVE - BARRIER FREE - 1.6 GPF) A. FIXTURE:AMERICAN STANDARD #2854.016, WHITE ELONGATED BOWL B. VALVE: ZURN Z6000AV-WS1, 1.6 GALLON PER FLUSH C. SEAT: AMERICAN STANDARDS #5901.100 WHITE OPEN FRONT D. TRIM: WAX RING, TWO BOLT CAPS INCLUDED	1"	--	4"	2"	
P-2A	URINAL (ADA WALL HUNG - FLUSH VALVE - BARRIER FREE - 0.5 GPF) A. FIXTURE: AMERICAN STANDARD #6555.001, TOP SPUD, WHITE, ELONGATED RIM B. VALVE: ZURN Z6003AV-EWS, 0.5 GALLON PER FLUSH C. CARRIER: ZURN Z1221 D. MOUNTING: 17 INCHES MAX. FROM FINISHED FLOOR TO FLOOD RIM	3/4"	--	2"	2"	
P-4	SHOWER (42"X42") A. FIXTURE: PRAXIS #M4242 SH TILE WITH CENTRAL DRAIN. PROVIDE SUPPORTS AS REQUIRED. UNIT SHALL BE EQUIPPED WITH INTEGRALLY MOLDED SOAP DISH AND 4" THRESHOLD. B. TRIM: SHOWER VALVE AND HEAD SHALL BE DELTA #T17230 CHROME PLATED LEVER TYPE SHOWER VALVE AND LOW FLOW 3-POSITION SHOWER HEAD	1/2"	1/2"	2"	2"	
P-4A	ADA SHOWER (48"X37") A. FIXTURE: FREEDOM SHOWERS #APF4836BF4P WITH CENTRAL DRAIN. ACCESSORIES: GRAB BARS, FOLDING SEAT COLLAPSIBLE WATER RETAINER, DRAIN, WEIGHTED SHOWER CURTAIN AND ROD, SLIDE BAR. 7/8 BARRIER FREE THRESSHOLD. PROVIDE SUPPORTS AS REQUIRED. B. TRIM: SHOWER VALVE AND HEAD SHALL BE DELTA #T13H153-25 POLISHED CHROME PLATED PRESSURE BALANCE VALVE. PRESSURE BALANCE LEVER HANDLE ADA COMPLIANT, HAND SHOWER BACKFLOW PROTECTION PRIOVIDE BY TWO CERTIFIED CHECK VALVES IN SERIES, HAND SHOWER ADA COMPLIANT. INTEGRAL CHECK VALVES, #5 HANDSHOWER WITH 24" STAINLESS STEEL SLIDE BAR, #5 SHOWER 1.5 GPM. C. COORDINATE REQUIREMENT FOR SLAB DEPRESSION AS REQUIRED WITH STRUCTURAL DRAWINGS.	1/2"	1/2"	2"	2"	
P-5	1-COMPARTMENT BUDGET SINK - FREE STANDING A. FIXTURE: BK-RESOURCES #BK8BS-1-24-14 FREE STANDING 1-COMPARTMENT STAINLESS STEEL SINK, 24"X24"X14" NO DRAINBOARDS W/ GALV. LEGS, ADJUSTABLE HIGH IMPACT CORROSION RESISTANT FEET. B. FAUCET: BK-RESOURCES #BKF-G 8" CENTERSET SPLASH MOUNT FAUCET WITH SWING SPOUT, #BKF-C414-VR VANDAL RESISTANT AERATOR .5 GPM, #BKF-WBH WRIST BLADE HANDLES AND #BK-DMMK-90 FAUCET MOUNTING KIT. BRAIDED SUPPLIES AND GRID DRAIN. C. TRIM: ZURN 8700-PC SERIES 1-1/4 INCH SEMI-CAST BRASS P-TRAP, ZURN Z8804-XL-PC WHEEL HANDLE STOPS.	1/2"	1/2"	2"	2"	2.
P-5A	HAND SINK (STAINLESS STEEL WALL HUNG - ADA) A. FIXTURE: BK-RESOURCES #BKHS-ADA-D-P-G 14"X16"X5" WITH 8" SPLASHMOUNT 2-HOLE B. FAUCET: BK-RESOURCES #BKF-4DM-3G-G 4" OC 3-1/2" GOOSENECK SPOUT FAUCET, 8" RISER, 1" TURN DOWN ON RISER. #BKF-C1414-VR VANDAL RESISTANT AERATOR .5 GPM AND WRIST BLADE HANDLES #BKF-WBH, WALL BRACKET, MARINE EDGE 18/304 STAINLESS STEEL BRAIDED SUPPLIES AND GRID DRAIN. #BKF-C414-VR VANDAL RESISTANT AERATOR 0.5 GPM C. TRIM: ZURN 8700-PC SERIES 1-1/4 INCH SEMI-CAST BRASS P-TRAP, ZURN Z8804-XL-PC WHEEL HANDLE STOPS. D. CARRIER: PROVIDE WALL PLATE AND SUPPORTS	1/2"	1/2"	2"	2"	2.
P-6A	SINK (ADA DOUBLE COMPARTMENT) A. FIXTURE: JUST DL-ADA-1925-A-GR, 19"X25"X6.5" B. FAUCET: JUST #902, DECK MOUNTED FAUCET 8" SWING SPOUT 2.2 GPM FLOW WITH HOSE SPRAY C. TRIM: TWO ZURN Z8743-1-PC GRID DRAIN WITH 1-1/2 INCH TAILPIECE, ZURN Z8804-XL-PC WHEEL HANDLE STOPS, ONE ZURN Z8702-PC SERIES 1-1/2 INCH BY 1-1/2 INCH SEMI-CAST BRASS P-TRAP, ONE ZURN Z8751 CONTINUOUS WASTE.	1/2"	1/2"	2"	2"	
P-9	MOP SINK A. FIXTURE: MUSTEE # 63M 24X24X10 FLOOR MOUNTED BASIN B. FAUCET: MUSTEE #63.600A HEAVY DUTY CHROME PLATED BRASS, 8" CENTER FAUCET WITH VACUUM BREAKER STOPS, MUSTEE #65.700 HOSE & HOSE HOLDER, MUSTEE # 65.600 MOP HANGER, BUMPER AND WALL GUARDS. 3" DRAIN. C. MOUNTING: MOUNT FAUCET 36 INCHES ABOVE FINISHED FLOOR.	3/4"	3/4"	3"	2"	
P-12B	ELECTRIC WATER COOLER HIGH-LOW WITH BOTTLE FILLER A. FIXTURE: ELKAY LZSTL8WSVRK - EZH20 WITH COOLING SYSTEM 8GPH STAINLESS STEEL 50 DEG. F WATER 115V/1 - 1/5 HP COMP. 1.5 GPM FILL RATE. ADJUST STREAM HEIGHT TO 4" ABOVE SPOUT B. TRIM: ONE ZURN Z8802-XL-LR-8860-12-PC SUPPLY WITH WHEEL HANDLE STOP. ONE ZURN Z8700-PC SERIES. 1-1/4 INCH SEMI-CAST BRASS P-TRAP C. MOUNTING: 36 INCHES FROM LOW BUBBLER TO FINISHED FLOOR. D. CARRIER: (2) ZURN Z1225	1/2"	--	2"	2"	
P-19	SEE HOSE BIBB SCHEDULE	3/4"	--			
P-19A	SEE HOSE BIBB SCHEDULE	3/4"	--			
P-24D	EMERGENCY EYEWASH - WALL MOUNTED A. FIXTURE: BRADLEY #S19-220B GALV. STEEL PROTECTED WITH BRADTECT SAFETY YELLOW COATING WITH WALL BRACKET. B. TRIM: BRADLEY S19-2000 NAVIGATOR EMERGENCY THERMOSTATIC MIXING VALVE WITH COLD WATER BY-PASS IN A STAINLESS STEEL CABINET ASSEMBLY. PROVIDE UNIT WITH ADJUSTABLE HIGH TEMPERATURE LIMIT STOP. PROVIDE TEMPERATURE GAUGE FOR OUTLET SIDE OF MIXING VALVE AS PART OF ASSEMBLY. CONTRACTOR SHALL COORDINATE MOUNTING LOCATION OF RECESSED MIXING VALVE BOX WALL WITH ARCHITECT.	3/4"	3/4"	2"	2"	

DOMESTIC WATER HEATER SCHEDULE

GENERAL NOTES:

1. SEE SPECIFICATIONS FOR ADDITIONAL REQUIREMENTS AND ACCESSORIES.
2. PROVIDE 4" THICK REINFORCED CONCRETE PAD BELOW ALL FLOOR MOUNTED EQUIPMENT.
3. PROVIDE DISCONNECT WITHIN SIGHT OF THE WATER HEATER AS REQUIRED PER IPC-2015 SECTION 504.3. PROVIDE BRANCH CIRCUIT PROTECTION AS REQUIRED. COORDINATE WITH ELECTRICAL DRAWINGS FOR EXACT REQUIREMENT PRIOR TO CONSTRUCTION.

REMARKS:

A. HEATER WITH BRONZE CIRCULATING PUMP(S) AND STARTER(S).
B. CONDENSATE NEUTRALIZATION KIT.
C. CONCENTRIC VENT KIT WITH APPLICABLE WALL OR ROOF CAP.

DESIGNATION	SERVICE	MANUFACTURER	MODEL NUMBER	RECOVERY GPH (90° RISE)	FUEL	INPUT BTU	STORAGE TANK GAL.	REMARKS
GWH-1	DOMESTIC	A.O. SMITH	BTXL-100	129	PROPANE GAS	100000	75	

PUMP SCHEDULE

GENERAL NOTES:

1. SEE SPECIFICATIONS FOR ADDITIONAL REQUIREMENTS AND ACCESSORIES.
2. MOUNT HOT WATER RECIRCULATING PUMP AT 5'-0" ABOVE FINISHED FLOOR WITH WALL BRACKETS.

REMARKS:

A. BRONZE CONSTRUCTION FOR DOMESTIC WATER SERVICE.
B. STARTER BY DIVISION 26.
C. PUMP REMOVAL KIT.

DESIGNATION	MANUFACTURER	MODEL NUMBER	TYPE	GPM	TOTAL HEAD FT	MOTOR HP	ELECTRICAL VOLTAGE	ELECTRICAL PHASE	REMARKS
RP-1	GRUNDFOS	UPS15-42F	IN-LINE	46 MAX.	0-32	1/25	115 V	1	A,B,C.

PIPING MATERIALS SCHEDULE

PLUMBING SYSTEM	PLUMBING MATERIAL DESCRIPTION
SANITARY DRAIN PIPING	STANDARD WEIGHT CAST IRON PIPE, BELL & SPIGOT JOINTS (BELOW SLAB)
SANITARY DRAIN PIPING	STANDARD WEIGHT CAST IRON PIPE, WITH NO HUB JOINTS (ABOVE SLAB)
VENT PIPING	STANDARD WEIGHT CAST IRON PIPE, WITH NO HUB JOINTS (ABOVE SLAB)
DOMESTIC WATER PIPING (ABOVE SLAB)	TYPE "L". COPPER TUBING, WITH WROUGHT COPPER FITTINGS (ASTM B88).
DOMESTIC WATER PIPING (BELOW SLAB)	TYPE "K". COPPER TUBING, WITH BRAZED WROUGHT COPPER FITTINGS (ASTM B88).

PROJECT NO. 39999-3609-04
PIN NO. 131121.0

REVISIONS

DESCRIPTION	BY	DATE

TDOT HENDERSON COUNTY MAINTENANCE BUILDING
370 ROCK MILAM ROAD
CEDAR GROVE, TN 38321

DATE AUGUST 18, 2023
PHASE CONSTRUCTION

FIELD SET TFM# 21349 PROJECT# 2024-04-17-10

Wold HFR DESIGN
214 Centerview Drive Suite 300
Brentwood, TN 37027
woldae.com phone: 615.370.8500
fax: 615.370.8530

SSR Smith Seckman Reid, Inc.
2650 Thousand Oaks Boulevard,
Suite 4200
Memphis, TN 38118
(901) 683-3900
FAX: (901) 683-3990
www.ssr-inc.com
SSR Project #: 22640620

SEALED BY

WALTER E. BLACK REGISTERED ENGINEER AGRICULTURE NO. 104822 STATE OF TENNESSEE
05/31/2023

STATE OF TENNESSEE
DEPARTMENT OF
TRANSPORTATION

NOTES, LEGENDS & SCHEDULES
P0.1

GENERAL PLUMBING SPECIFICATIONS

1. FURNISH, INSTALL PROVIDE AND MAKE OPERATIVE ALL EQUIPMENT, MATERIALS, SUPERVISION, LABOR AND ANY AND ALL ITEMS NECESSARY FOR THE PROPER INSTALLATION OF A CORRECTLY FUNCTIONING PLUMBING SYSTEM AS SHOWN ON THE DRAWINGS AND SPECIFIED HEREIN.
2. EQUIPMENT SHALL BE INSTALLED IN ACCORDANCE WITH THE MANUFACTURERS RECOMMENDATIONS. EQUALS MAY BE SUBSTITUTED ONLY IF PRIOR APPROVAL IS OBTAINED FROM OWNER.
3. ORDINANCES, PERMITS AND CODES. THE WORKMANSHIP AND MATERIALS COVERED BY THESE SPECIFICATIONS SHALL CONFORM TO ALL REGULATIONS OF ALL THE AUTHORITIES HAVING JURISDICTION.
4. THE CONTRACTOR SHALL OBTAIN AND PAY FOR ALL PERMITS, CONNECTION AND INSPECTION FEES AS REQUIRED FOR THE COMPLETE INSTALLATION OF THE PLUMBING SYSTEM.
5. THE LOCATION OF PIPING AND EQUIPMENT, AS SHOWN ON THE DRAWINGS, IS DIAGRAMMATIC AND SCHEMATIC AND IT IS THE RESPONSIBILITY OF THE CONTRACTOR TO MAKE HIS OWN WORKING LAYOUT TO ELIMINATE ALL STRUCTURAL AND ARCHITECTURAL CONFLICTS IN THE BUILDING.
6. VERIFY ALL MEASUREMENTS AT THE SITE AND COORDINATE ALL WORK SO THAT IT DOES NOT INTERFERE WITH THE WORK OF OTHER TRADES.
7. INSULATION: ALL INSULATION, INCLUDING JACKET, OR FACING AND ADHESIVE USED TO ADHERE TO FACING OR JACKET TO THE INSULATION SHALL HAVE A COMPOSITE FIRE AND SMOKE HAZARD RATING TESTED BY THE PROCEDURE RECOMMENDED BY ASTM E-84, NFPA 225 OR UL 723. NOT EXCEEDING FLAME SPREAD 25, SMOKED DEVELOPED 50. ALL INSULATION ACCESSORIES SHALL ALSO HAVE THE RATING LISTED ABOVE.
8. DOMESTIC WATER PIPES SHALL BE INSULATED WITH ONE (1) INCH THICK PREFORMED HIGH DENSITY FIBERGLASS WITH FACTOR APPLIED VAPOR BARRIER AND SELF SEALING LAP, SUCH AS MANVILLE MICRO-LOK.
9. DOMESTIC WATER PIPES LARGER THAN 1 1/4" SHALL BE TYPE "L" COPPER ABOVE GROUND / SLAB AND TYPE "K" COPPER BELOW GRADE / SLAB. INSTALL DIELECTRIC UNIONS AT CONNECTIONS TO DISSIMILAR METALS. DOMESTIC HOT AND COLD WATER PIPING FOR PIPE SIZES 1 1/4" AND SMALLER MAY BE CROSS-LINKED POLYETHYLENE (PEX) MANUFACTURED IN ACCORDANCE WITH ASTM F876 AND F877. FITTING ASSEMBLY SHALL BE MANUFACTURED FROM MATERIAL LISTED IN ASTM F1960. FITTINGS SHALL BE INSTALLED INSIDE EXPANDED PIPE WITH FITTING ID MATCHING TUBING ID, SUPPLY STOPS SHALL BE COMPATIBLE WITH THE PEX TUBING AND SUPPLIED BY THE SAME TUBING MANUFACTURER.
10. ANY WATER PIPING ROUTED IN AN EXTERIOR WALL SHALL BE INSIDE THE FACE OF THE BUILDING INSULATION OR OTHERWISE EXPOSED TO FREEZING TEMPERATURES SHALL BE PROVIDED WITH CHROMOLOX SRF (OR EQUAL) SELF-REGULATING FREEZE PROTECTION CABLE - 8 WATTS PER LINEAL FOOT OF PIPING.
11. NATURAL GAS PIPE SHALL BE SCHEDULE 40 BLACK STEEL WITH THREADED FITTINGS. IINSTALL PRESSURE REDUCING VALVES WHERE REQUIRED. SYSTEM INSTALLATION TO BE IN ACCORDANCE WITH NFPA 34 AND LOCAL CODES.
12. IT IS THE INTENT OF THESE DRAWINGS TO COVER ALL WORK FOR A COMPLETE FIRST CLASS PLUMBING INSTALLATION - ANY EQUIPMENT, TRIM HARDWARE AND/OR DEVICES SHALL BE UTILIZED IN THIS CLASS OF WORK THOUGH NOT SPECIFICALLY MENTIONED OR SHOWN ON THE DRAWINGS, BUT WHICH MAY BE NECESSARY FOR THE SATISFACTORY COMPLETION OF THE WORK (AS DETERMINED BY THE ARCHITECT) SHALL BE FURNISHED AND INSTALLED BY THE PLUMBING CONTRACTOR AS PART OF HIS TOTAL WORK.
13. ALL PIPING PASSING THRU A RATED OR NON-RATED WALL TO BE SLEEVED AND CAULKED (WITH FIREPROOF MATERIAL IF REQUIRED) IN ACCORDANCE WITH NFPA. STATE AND LOCAL CODES AS REQUIRED - REFER TO ARCHITECT FOR VARIOUS WALL RATINGS.

HOSE BIBB SCHEDULE

TYPE	DESCRIPTION	CW	HW	DR	VENT
HB-1 P-19	HOSE BIBB 1. ZURN MODEL Z-1341XL LEAD FREE, ANTI-SIPHON, MODERATE CLIMATE, WITH EXTERNAL VACUUM BREAKER WITH MALE HOSE CONNECTION, VANDAL RESISTANT OPERATING STEM AND SECURED WHEEL HANDLE. 2. MOUNTING HEIGHT: 18" ABOVE FINISHED FLOOR	3/4"	-	-	-

DRAINS SCHEDULE

TYPE	DESCRIPTION	CW	HW	DR	VENT
GCO	GRADE/EXTERIOR CLEAN-OUT - ZURN Z-1400 WITH HEAVY DUTY COVER PLATE. INSTALL GCO IN MIN. 12"X12"X6" CONC. PAD FLUSH WITH TOP OF CLEANOUT. (SEE PLANS FOR SIZES)	-	-	-	-
ICO WCO	INTERIOR CLEAN-OUT - ZURN Z-1400-T WITH FLANGE & C.C. (SIZE TO MATCH LINE SERVED)	-	-	-	-
FD-1	FLOOR DRAIN (3" DIA. OUTLET) - JR SMITH MODEL 2005-B WITH ADJUSTABLE ROUND STRAINER HEAD, FLASHING COLLAR AND P-TRAP. PROVIDE TRAP PRIMER.	-	-	3"	2"
FD-2	SHOWER DRAIN (2" DIA. OUTLET) - JR SMITH MODEL 220-10 SERIES WITH ADJUSTABLE ROUND STRAINER HEAD, FLASHING COLLAR AND P-TRAP.	-	-	2"	2"
TP	TRAP PRIMERS - PRECISION PLUMBING PRODUCTS INC. PR-500 TRAP PRIMER VALVE - INSTALL IN NEARBY COLD WATER LINE - PROVIDE ONE VALVE PER TRAP OR VALVES WITH DISTRIBUTION UNITS AS REQUIRED TO SERVE ALL FLOOR DRAINS AND OTHER NOTED LOCATIONS	1/2"	-	-	-

PLAN KEYED NOTES

1. SEE CIVIL ENGINEERING SITE PLAN FOR CONTINUATION.
2. COORDINATE EXACT LOCATION OF PLUMBING WITH STRUCTURAL FOOTING PRIOR TO CONSTRUCTION.
3. 2" DOMESTIC CW SERVICE. ESTIMATED MAX. DEMAND 46 GPM.
4. CONTRACTOR SHALL COORDINATE WITH LOCAL WATER SUPPLIER AND PROVIDE POINT OF ENTRY BACKFLOW PREVENTER AS REQUIRED. PIPE UNIT RELIEF OPENING THRU EXTERIOR WALL AND SPILL 6" ABOVE GRADE. PROVIDE BUG SCREEN OR FLAPPER.
5. 4" WASTE UP.
6. 3" WASTE UP.
7. 1 1/4" CONDENSATE CONNECTION WITH DEEP SEAL TRAP. COORDINATE EXACT LOCATION OF DRAIN PRIOR TO CONSTRUCTION.
8. DRY WELL. SEE DETAIL 6/P2.0
9. 2" WASTE UP.
10. 2" VENT UP.
11. 3" VENT UP.

INTERIOR WALL TYPES

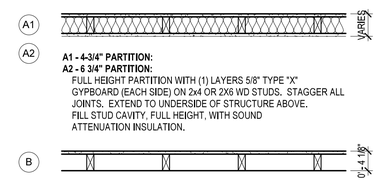

A1 - 4-3/4" PARTITION:
A2 - 6 3/4" PARTITION:
FULL HEIGHT PARTITION WITH (1) LAYERS 5/8" TYPE "X" GYPBOARD (EACH SIDE) ON 2x4 OR 2X6 WD STUDS. STAGGER ALL JOINTS. EXTEND TO UNDERSIDE OF STRUCTURE ABOVE. FILL STUD CAVITY, FULL HEIGHT, WITH SOUND ATTENUATION INSULATION.

4-1/8" PARTITION:
FULL HEIGHT PARTITION WITH (1) LAYERS 5/8" TYPE "X" GYPBOARD (ONE SIDE) ON 2x4 WD STUDS. STAGGER ALL JOINTS. EXTEND TO UNDERSIDE OF STRUCTURE ABOVE.

EXTERIOR WALL TYPES

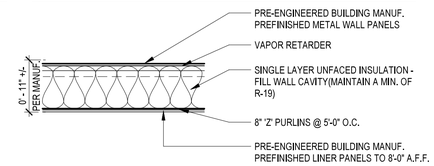

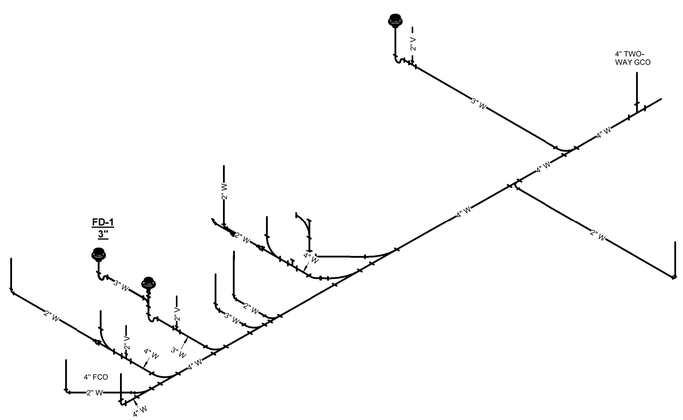

2 PLUMBING RISER DIAGRAM CORE AND SHELL

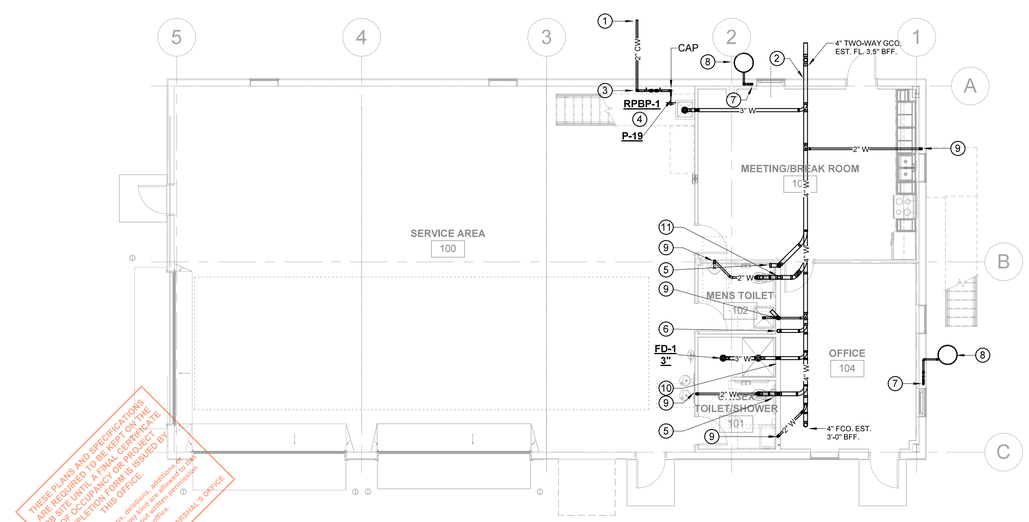

1 PLUMBING PLAN - LEVEL 1 CORE AND SHELL
1/8" = 1'-0"

THESE PLANS AND SPECIFICATIONS ARE REQUIRED TO BE KEPT ON THE JOB SITE UNTIL A FINAL CERTIFICATE OF OCCUPANCY OR PROJECT COMPLETION FORM IS ISSUED BY THIS OFFICE.
No alteration, deletion, additions, or installations of any kind are allowed to be approved without written permission of this office.
TENNESSEE STATE FIRE MARSHAL'S OFFICE

PROJECT NO.	39999-3609-04
PIN NO.	131121.0

REVISIONS

DESCRIPTION	BY	DATE

TDOT HENDERSON COUNTY MAINTENANCE BUILDING
370 ROCK MILAM ROAD
CEDAR GROVE, TN 38321

DATE AUGUST 18, 2023
PHASE CONSTRUCTION

Wold HFR DESIGN
214 Centerview Drive Suite 300
Brentwood, TN 37027
woldae.com phone: 615.370.8500
fax: 615.370.8530

SSR Smith Seckman Reid, Inc.
2650 Thousand Oaks Boulevard, Suite 4200
Memphis, TN 38118
(901) 683-3900
FAX: (901) 683-3990
www.ssr-inc.com
SSR Project #: 22640620

SEALED BY

STATE OF TENNESSEE
DEPARTMENT OF
TRANSPORTATION

PLUMBING
CORE & SHELL

P1.0

SHEET 24 OF 34

FIELD SET TFM# 21349 PROJECT# 2024-04-17-10

PLAN KEYED NOTES

1. SEE CIVIL ENGINEERING SITE PLAN FOR CONTINUATION.
2. COORDINATE EXACT LOCATION OF PLUMBING WITH STRUCTURAL FOOTING PRIOR TO CONSTRUCTION.
3. 3" WASTE UP
4. 4" WASTE UP W/ WCO.
5. 2" VENT UP.
6. 3" VENT UP.
7. 1" DRAIN PAN FROM ABOVE. SPILL 6" ABOVE GRADE.
8. 1 1/4" CONDENSATE CONNECTION WITH DEEP SEAL TRAP. COORDINATE EXACT LOCATION OF DRAIN PRIOR TO CONSTRUCTION.
9. DRY WELL. SEE DETAIL 6/P2.0
10. COORDINATE REQUIREMENT FOR SLAB DEPRRESSION AS REQUIRED.

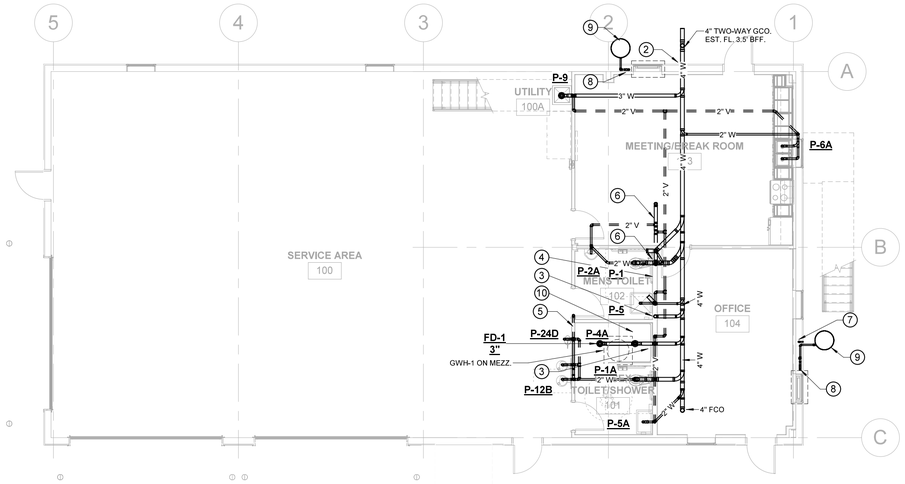

4 FIRST FLOOR PLAN - WASTE AND VENT
1/8" = 1'-0"

PLAN KEYED NOTES

1. 4" WASTE DN. & 4" VTR.
2. 2" VENT FROM BELOW.
3. 3" WASTE DN.
4. 1" DRAIN PAN TO ABOVE 1ST FLOOR CEILING.
5. 1" DRAIN PAN. DN.
6. PROVIDE CARBON MONOXIDE MONITOR ON EXTERIOR WALL OF WATER HATER CLOSET. THE ACTIVATION OF THE MONITOR SHALL SOUND AN AUDIBLE ALARM WITHIN THE SPACE.
7. CONDENSATE CONNECTION FOR AC UNITS.
8. 1 1/4" IW/CONDENSATE DRAIN DN.

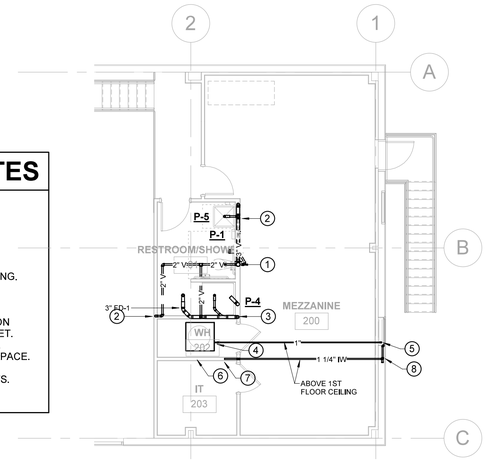

3 MEZZ LEVEL PLAN - WASTE AND VENT
1/8" = 1'-0"

PLAN KEYED NOTES

1. SEE CIVIL ENGINEERING SITE PLAN FOR CONTINUATION.
2. 2" DOMESTIC CW SERVICE. MAX. DEMAND 46 GPM.
3. CONTRACTOR SHALL COORDINATE WITH LOCAL WATER SUPPLIER AND PROVIDE POINT OF ENTRY BACKFLOW PREVENTER AS REQUIRED. PIPE UNIT RELIEF OPENING THRU EXTERIOR WALL AND SPILL 6" ABOVE GRADE. PROVIDE BUG SCREEN OR FLAPPER.
4. 3/4" HW & 3/4" CW DN.
5. 1/2" HW & CW DN.
6. 1/2" CW DN. TO ICE MAKER BOX. MAKE FINAL CONNECTION AS REQUIRED.
7. 3/4" CW DN.
8. 1/2" CW DN.
9. 1" CW DN.
10. 1" HW FROM ABOVE.
11. 3/4" HWR UP.
12. 1 1/2" CW UP.
13. NOT USED.
14. 3/4" HW & CW DN.
15. 3/4" HW MAIN UP & DN. SEE DOMESTIC HW LOOP DETAIL 7/P2.0

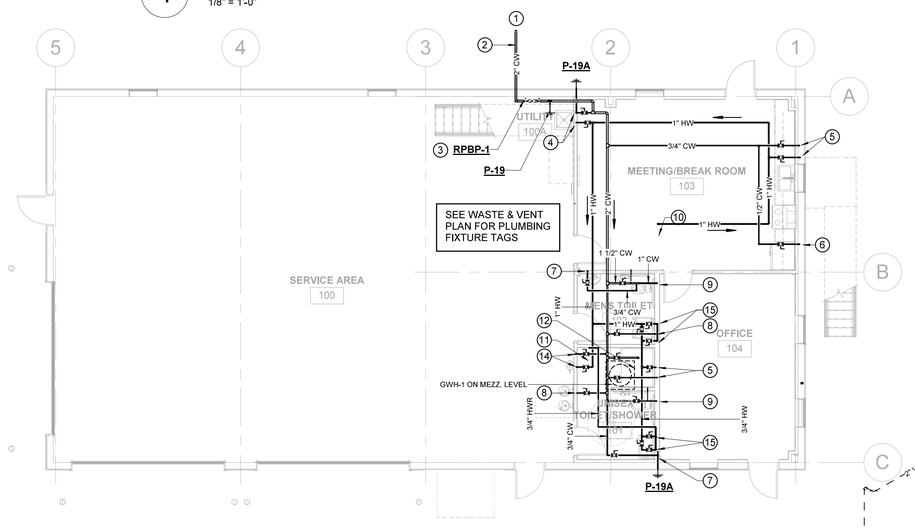

2 FIRST FLOOR PLAN - WATER
1/8" = 1'-0"

PLAN KEYED NOTES

1. 1/2" HW & CW DN.
2. BALL VALVE AND SHOCK ARRESTOR ABOVE CEILING. PROVIDE ACCESS PANEL AS REQUIRED.
3. 1" CW DN.
4. 1" HW DN.
5. 3/4" HWR FROM BELOW.
6. 1 1/2" CW FROM BELOW.
7. 1 1/4" HW, 1 1/4" CW, 3/4" HWR TO WATER HEATER. SEE TYPICAL DETAIL 3/P2.0

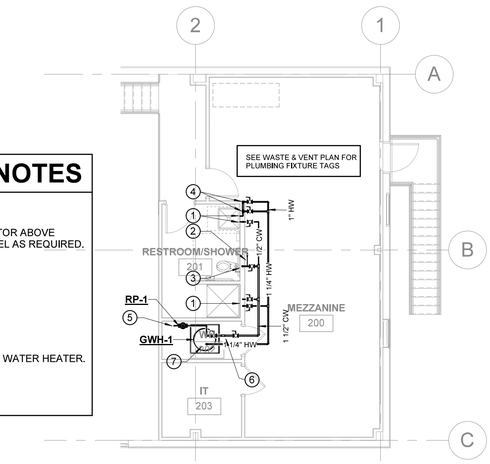

1 MEZZ LEVEL PLAN - WATER
1/8" = 1'-0"

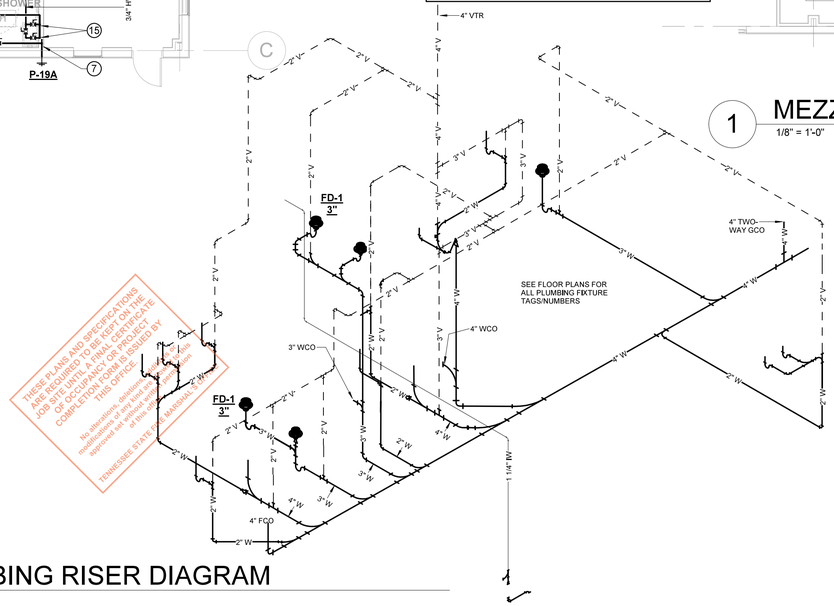

5 PLUMBING RISER DIAGRAM

INTERIOR WALL TYPES

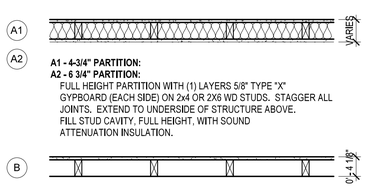

A1 - 4-3/4" PARTITION:
A2 - 6 3/4" PARTITION:
FULL HEIGHT PARTITION WITH (1) LAYERS 5/8" TYPE "X" GYPBOARD (EACH SIDE) ON 2x4 OR 2X6 WD STUDS. STAGGER ALL JOINTS. EXTEND TO UNDERSIDE OF STRUCTURE ABOVE. FILL STUD CAVITY, FULL HEIGHT, WITH SOUND ATTENUATION INSULATION.

4-1/8" PARTITION:
FULL HEIGHT PARTITION WITH (1) LAYERS 5/8" TYPE "X" GYPBOARD (ONE SIDE) ON 2x4 WD STUDS. STAGGER ALL JOINTS. EXTEND TO UNDERSIDE OF STRUCTURE ABOVE.

EXTERIOR WALL TYPES

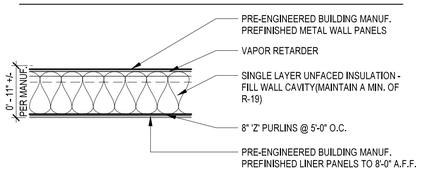

THESE PLANS AND SPECIFICATIONS ARE ISSUED TO A KEY TYPE JOB SITE UNTIL A FINAL CERTIFICATE OF OCCUPANCY FOR THE COMPLETED WORK IS ISSUED BY THIS OFFICE.
No alterations, deletions or additions, modifications of any kind are to be made without approval and written authorization of this office.
TENNESSEE STATE FIRE MARSHAL'S OFFICE

PROJECT NO.	39999-3609-04
PIN NO.	131121.0

REVISIONS

DESCRIPTION	BY	DATE

TDOT HENDERSON COUNTY MAINTENANCE BUILDING

370 ROCK MILAM ROAD
CEDAR GROVE, TN 38321

PHASE: CONSTRUCTION
DATE: AUGUST 18, 2023

FIELD SET TFM# 21349 PROJECT# 2024-04-17-10

Wold HFR DESIGN
214 Centerview Drive Suite 300
Brentwood, TN 37027
woldae.com phone: 615.370.8500
fax: 615.370.8530

SSR Smith Seckman Reid, Inc.
2650 Thousand Oaks Boulevard,
Suite 4200
Memphis, TN 38118
(901) 683-3900
FAX: (901) 683-3990
www.ssr-inc.com
SSR Project #: 22640620

SEALED BY

STATE OF TENNESSEE
DEPARTMENT OF
TRANSPORTATION

PLUMBING FIRST FLR./ MEZZ.BUILD-OUT P1.1

SHEET 25 OF 34

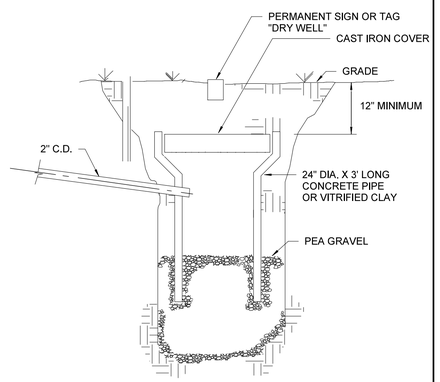

DRY WELL DETAIL | 6

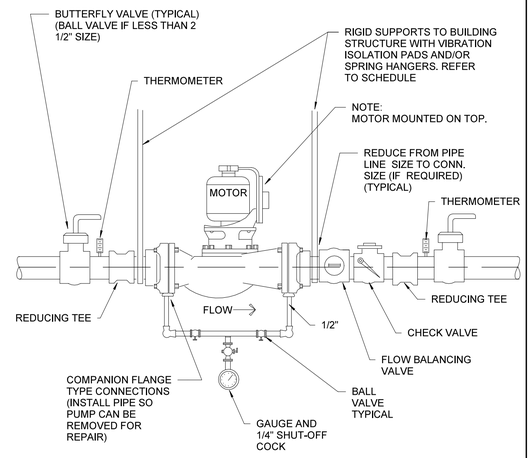

IN-LINE CIRCULATING PUMP (RP-1) | 4

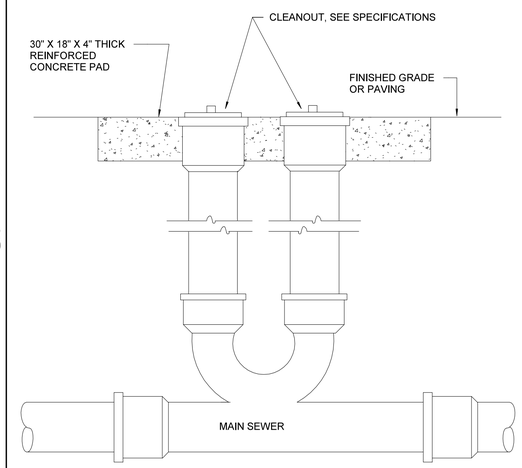

TWO-WAY GRADE CLEANOUT | 2

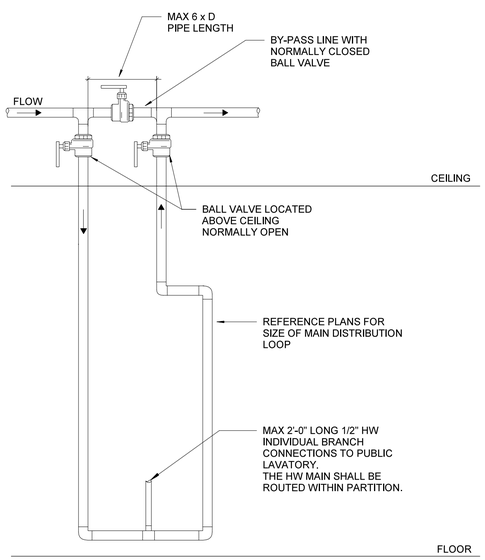

03P523

DOMESTIC HOT WATER LOOP | 7

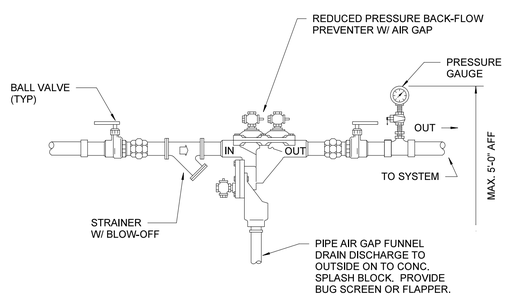

NOTE:
1. SEE FLOOR PLAN FOR SIZE OF R.P.B.P. & PIPE.

REDUCED PRESSURE BACKFLOW PREVENTER | 5

NOTE:
1. REFER TO MIXING VALVE MFG'S INSTALLATION MANUAL FOR EXACT PIPING DETAILS
2. WATER HEATER SHALL BE SEALED COMBUSTION TYPE.
3. SEE HVAC DRAWINGSF FOR CONTINUATION OF AIR INTAKE AND EXAUST.
4. SEE HVAC DRAWINGS FOR CONTINUATION OF GAS PIPING.
5. PROVIDE MAXIMUM CLEARANCE AROUND WATER HEATER AS REQUIRED.

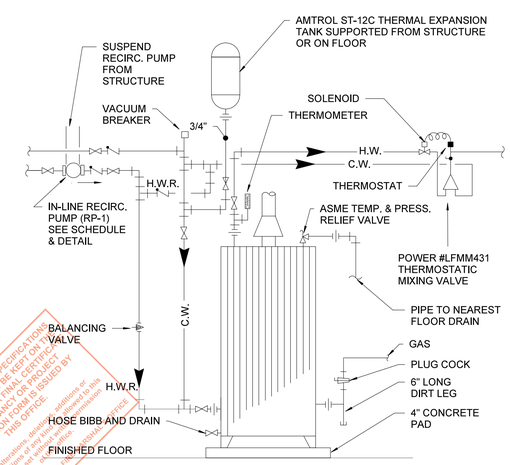

THESE PLANS AND SPECIFICATIONS ARE REQUIRED TO BE KEPT ON THE JOB SITE UNTIL A FINAL CERTIFICATE OF OCCUPANCY OR PROJECT COMPLETION FORM IS ISSUED BY THE OFFICE.
Any alteration, deletion, addition or modification of this document without approval of the issuing office.
TENNESSEE STATE FIRE MARSHAL'S OFFICE

GAS WATER HEATER DIAGRAM (GWH-1) | 3

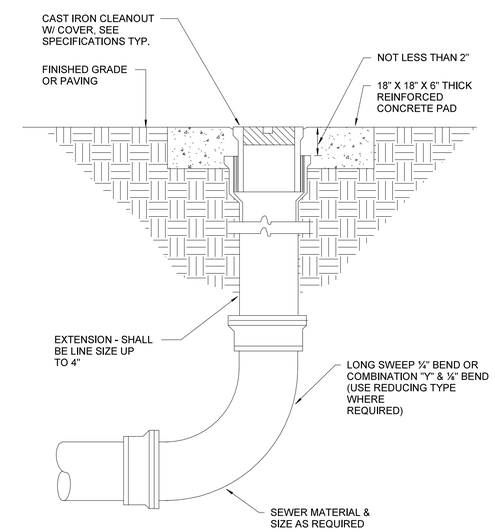

EXTERIOR/GRADE CLEANOUT | 1

ALL DETAILS ARE NOT TO SCALE

PROJECT NO.	39999-3609-04
PIN NO.	131121.0

REVISIONS

DESCRIPTION	BY	DATE

TDOT HENDERSON COUNTY MAINTENANCE BUILDING

370 ROCK MILAM ROAD
CEDAR GROVE, TN 38321

DATE AUGUST 18, 2023

PHASE CONSTRUCTION

Wold HFR DESIGN
214 Centerview Drive Suite 300
Brentwood, TN 37027
woldae.com phone: 615.370.8500
fax: 615.370.8530

SSR Smith Seckman Reid, Inc.
2650 Thousand Oaks Boulevard, Suite 4200
Memphis, TN 38118
(901) 683-3900
FAX: (901) 683-3990
www.ssr-inc.com
SSR Project #: 226406620

SEALED BY

WALTER E. BLACK
REGISTERED ENGINEER
No. 104822
STATE OF TENNESSEE
08/18/2023

STATE OF TENNESSEE
DEPARTMENT OF TRANSPORTATION

PLUMBING DETAILS

P2.0

SHEET 26 OF 34

FIELD SET TFM# 21349 PROJECT# 2024-04-17-10

LEGEND

(NOT ALL SYMBOLS MAY BE USED)

SYMBOL	DESCRIPTION
LIGHTING	
XX 1 / x	LIGHTING FIXTURE ANNOTATIONS (LOCATION OF DESIGNATORS MAY VARY) FIXTURE TYPE: XX CIRCUIT NUMBER: 1 CONTROL DESIGNATION: x
	SURFACE, SUSPENDED, OR RECESSED LUMINAIRES (TYPE DETERMINES MOUNTING)
	RECESSED OR SURFACE DOWNLIGHT LUMINAIRE
	PENDANT MOUNTED LUMINAIRE
	WALL MOUNTED LUMINAIRES
	NO SHADING INDICATES CONNECTION TO NORMAL BRANCH CIRCUIT
	SHADING INDICATES BATTERY BACKUP
	ILLUMINATED EXIT SIGNS, PROVIDE DIRECTIONAL ARROWS AND MOUNTING AS INDICATED ON PLANS
	BATTERY POWERED EMERGENCY LIGHT
	POLE MOUNTED SITE LIGHTING LUMINAIRES
RECEPTACLES	
11 XX	DUPLEX RECEPTACLE - STANDARD MOUNTING HEIGHT — 11 = CIRCUIT NUMBER (TYPICAL) XX= RECEPTACLE DESIGNATOR (TYPICAL)
	DUPLEX RECEPTACLE - ABOVE COUNTER OR SPECIAL MOUNTING HEIGHT
	DOUBLE-DUPLEX RECEPTACLE
	DOUBLE-DUPLEX RECEPTACLE - ABOVE COUNTER OR SPECIAL MOUNTING HEIGHT
	DUPLEX GFCI RECEPTACLE
	DUPLEX GFCI RECEPTACLE - ABOVE COUNTER OR SPECIAL MOUNTING HEIGHT
	SWITCHED DUPLEX RECEPTACLE - STANDARD MOUNTING HEIGHT
	SPECIAL CONFIGURATION RECEPTACLE (TYPE AS NOTED)
	FLOOR MOUNTED RECEPTACLE
SWITCHES AND LIGHTING CONTROLS	
S	SINGLE POLE SWITCH
S_3	THREE-WAY SWITCH
S_D	DIMMER SWITCH
S_{OC}	OCCUPANCY SENSOR SWITCH, WALL MOUNT
S_{VD}	VACANCY DIMMER
S_M	MOTOR RATED SWITCH WITH THERMAL OVERLOAD
CIRCUITS AND RACEWAYS	
	BRANCH CIRCUIT OR RACEWAY CONCEALED OR EXPOSED
	BRANCH CIRCUIT OR RACEWAY BELOW OR IN FLOOR SLAB OR BELOW GRADE
	CONDUIT OR RACEWAY TURNING UP
	CONDUIT OR RACEWAY TURNING DOWN
	CAPPED CONDUIT OR RACEWAY
	CIRCUIT OR CONDUIT CONTINUATION
PARTIAL CIRCUIT	HOMERUN TO PANELBOARD - NUMBER OF ARROWHEADS INDICATES QUANTITY OF CIRCUITS. REFER TO SPECIFICATIONS FOR MINIMUM CONDUIT SIZES. NOTES: 1. ALL BRANCH CIRCUITS SHALL BE #12 AWG MINIMUM, REFER TO THE SPECIFICATIONS FOR UPSIZING REQUIREMENTS DUE TO VOLTAGE DROP OR OTHER PURPOSES. 2. ALL BRANCH CIRCUITS SHALL CONTAIN A SEPARATE GREEN INSULATED GROUNDING CONDUCTOR, #12 AWG MINIMUM, OR OTHERWISE AS NOTED. 3. ALL 120V AND 277V BRANCH CIRCUITS SHALL UTILIZE A SEPARATE DEDICATED NEUTRAL UNLESS OTHERWISE NOTED.

LEGEND

(NOT ALL SYMBOLS MAY BE USED)

SYMBOL	DESCRIPTION
MISCELLANEOUS	
	NON-FUSIBLE SAFETY SWITCH, SIZE AS NOTED (AMP RATING/POLES)
	FUSIBLE SAFETY SWITCH, SIZE AS NOTED (AMP RATING/POLES/FUSE SIZE)
	COMBINATION MOTOR STARTER/SAFETY SWITCH
	FACTORY WIRED CONTROLLER OR EQUIPMENT
X	MOTOR CONNECTION
J	JUNCTION BOX
	PANELBOARD
VFD	VARIABLE FREQUENCY DRIVE
EXXX-1	SPECIALTY EQUIPMENT TAG
XXX-XX-XX	MECHANICAL EQUIPMENT TAG
	COMMUNICATIONS OUTLET - STANDARD MOUNTING HEIGHT, SPECIAL MOUNTING HEIGHT, CEILING
	WALL PHONE
ABBREVIATIONS	
ABC	ABOVE COUNTER
AFCI	ARC FAULT CIRCUIT INTERRUPTER
AFF	ABOVE FINISHED FLOOR
AFG	ABOVE FINISHED GRADE
CLG	CEILING
COF	COFFEE MACHINE
COP	COPIER
CR	CONTROLLED RECEPTACLE
E	EMERGENCY POWER
EPO	EMERGENCY POWER OFF
EWC	ELECTRIC WATER COOLER
FBO	FURNISHED BY OTHERS
FLR	FLOOR MOUNTED
FSD	FIRE/SMOKE DAMPER
GFCI	GROUND FAULT CIRCUIT INTERRUPTER
ICE	ICE MACHINE/MAKER
IG	ISOLATED GROUND
MW	MICROWAVE
PC	PERSONAL COMPUTER WORKSTATION
PR	PRINTER
RF	REFRIGERATOR
TC	TIME CLOCK
TV	TELEVISION
URF	UNDERCOUNTER REFRIGERATOR
USB	RECEPTACLE WITH USB OUTLET(S)
USBX	USB ONLY (X) = NUMBER OF USB OUTLETS
VFD	VARIABLE FREQUENCY DRIVE
VM	VENDING MACHINE
WP	WEATHERPROOF

THESE PLANS AND SPECIFICATIONS ARE REQUIRED TO BE KEPT ON THE JOB SITE UNTIL FINAL CERTIFICATE OF OCCUPANCY OR CERTIFICATE OF COMPLETION FORM IS ISSUED BY THIS OFFICE.
No alteration, deletion, additions, or modifications of any kind shall be made without written permission of this office.
TENNESSEE STATE FIRE MARSHAL'S OFFICE

SHEET INDEX

NUMBER	SHEET NAME
E0.1	ELECTRICAL LEGENDS
E1.0	ELECTRICAL CORE AND SHELL
E1.1	ELECTRICAL BUILD-OUT & MEZZANINE
E6.1	ELECTRICAL SCHEDULES

EQUIPMENT NOMENCLATURE

EQUIPMENT IDENTIFICATION TAGS ARE COMPOSED AS FOLLOWS:

[EQUIPMENT TYPE] [BRANCH OF POWER] [VOLTAGE] [LEVEL] [LOCATION]

EXAMPLE:

MSBNH1A

- MSB — MAIN SWITCHBOARD
- N — NORMAL POWER
- H — AREA A
- 1 — LEVEL 1
- A — 480/277V

EQUIPMENT TYPES:

MSG = MAIN SWITCH GEAR
SD = SERVICE DISCONNECT
DSG = DISTRIBUTION SWITCHGEAR
MSB = MAIN SWITCHBOARD
DSB = DISTRIBUTION SWITCHBOARD
USB = UNIT SUBSTATION
UPS = UNINTERRUPTIBLE POWER SUPPLY
MDP = MAIN DISTRIBUTION PANELBOARD
DP = DISTRIBUTION PANELBOARD
IP = ISOLATED POWER PANELBOARD
LP (OR P) = LIGHTING & BRANCH APPLIANCE PANELBOARD
LCP = LIGHTING CONTROL PANEL
LRP = LIGHTING RELAY PANEL
DCP = DIMMING CONTROL PANEL
MCC = MOTOR CONTROL CENTER
X = TRANSFORMER
G = GENERATOR
ATS = AUTOMATIC TRANSFER SWITCH
MTS = MANUAL TRANSFER SWITCH
WG = WIRING GUTTER
EL-# = ELEVATOR (# REPRESENTS CAB)

BRANCHES OF POWER:

N = NORMAL
E = EMERGENCY
S = LIFE SAFETY
C = CRITICAL
Q = EQUIPMENT
U = UPS

VOLTAGE

H = 480/277V
L = 208/120V

LEVELS:

1 = LEVEL 1
2 = LEVEL 2
3 = LEVEL 3
4 = LEVEL 4
5 = LEVEL 5
6 = LEVEL 6
7 = LEVEL 7
8 = LEVEL 8
9 = LEVEL 9

AREA / QUAD / SECTOR:

A = AREA A
B = AREA B
C = AREA C
D = AREA D
E = AREA E
F = AREA F
G = AREA G
H = AREA H
I = AREA I

NOTES:

1. REFER TO ARCHITECTURAL DRAWINGS FOR ELEVATIONS AND ADDITIONAL INFORMATION. ARCHITECTURAL ELEVATIONS SHALL GOVERN FOR SPECIAL MOUNTING HEIGHT RECEPTACLES AND SWITCHES.
2. COORDINATE ALL SPECIAL HEIGHT RECEPTACLES FOR TELEVISIONS WITH MOUNTING BRACKET AND CATV OUTLET.
3. REFER TO LEGENDS FOR SYMBOLS NOT SHOWN.

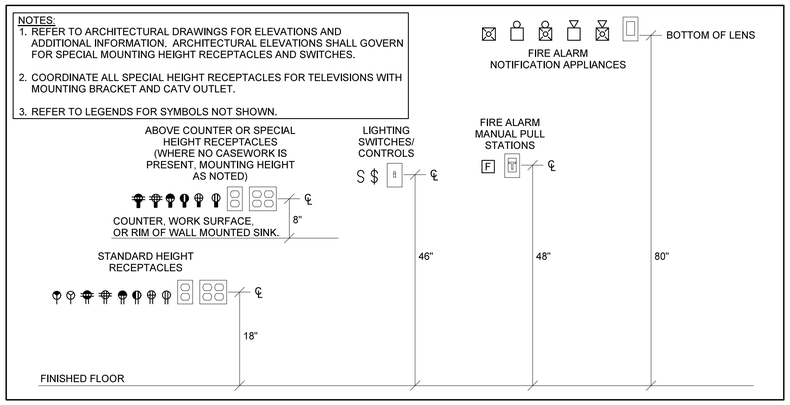

PROJECT NO.	39999-3609-04
PIN NO.	131121.0

REVISIONS

DESCRIPTION	BY	DATE

TDOT HENDERSON COUNTY MAINTENANCE BUILDING
370 ROCK MILAM ROAD
CEDAR GROVE, TN 38321

PHASE: CONSTRUCTION
DATE: AUGUST 18, 2023

Wold HFR DESIGN
214 Centerview Drive Suite 300
Brentwood, TN 37027
woldae.com phone: 615.370.8500
fax: 615.370.8530

SSR Smith Seckman Reid, Inc.
2650 Thousand Oaks Boulevard, Suite 4200
Memphis, TN 38118
(901) 683-3900
FAX: (901) 683-3990
www.ssr-inc.com
SSR Project #: 226406620

SEALED BY

GREGORIO LOBO — REGISTERED ENGINEER — AGRICULTURE — No. 122210 — STATE OF TENNESSEE
08.18.2023

STATE OF TENNESSEE
DEPARTMENT OF TRANSPORTATION

ELECTRICAL LEGENDS

E0.1

SHEET 27 OF 34

FIELD SET TFM# 21349 PROJECT# 2024-04-17-10

SHEET KEYED NOTES

1. PANEL AIC RATING IS BASED ON ASSUMPTION OF 75KVA UTILITY TRANSFORMER. CONTACT ELECTRICAL ENGINEER IF AVAILABLE FAULT CURRENT EXCEEDS 22,000 AMPS.
2. CONFIRM BREAKER SIZE WITH EQUIPMENT MANUFACTURER AND ADJUST WIRING AS REQUIRED. COORDINATE MOUNTING HEIGHT AND EXACT LOCATION WITH MECHANICAL.
3. COORDINATE EXACT MOUNTING HEIGHT AND LOCATION WITH OWNER.
4. PROVIDE 60/2 NON FUSED DISCONNECT FOR AIR COMPRESSOR. PROVIDE 2#6, 1#10G, IN 3/4"C. ELECTRICAL CONTRACTOR SHALL COORDINATE INSTALLATION WITH EQUIPMENT PROVIDER.
5. PROVIDE LOCAL DISCONNECT AT FLOOR LEVEL. COORDINATE EXACT REQUIREMENTS WITH MANUFACTURER AND LOCATION WITH OWNER.
6. PROVIDE 400 AMP, 2-POLE, 3-WIRE, NEMA 3R, FUSIBLE, QUICK CONNECT DOUBLE THROW SAFETY SWITCH WITH INTEGRATED CAMLOCK RECEPTACLES. THE SAFETY SWITCH WILL CONNECT THE ELECTRICAL UTILITY TO THE BUILDING IN THE UPPER POSITION AND WILL ENERGIZE THE CAMLOCK RECEPTACLES IN THE LOWER POSITION. QUICK CONNECT DOUBLE THROW SAFETY SWITCH TO BE EATON CATALOG NUMBER DT225NNRKLC OR APPROVED EQUAL. PROVIDE 400 AMP FUSES IN BOTH UPPER AND LOWER POSITION. PROVIDE BONDING JUMPER BETWEEN NEUTRAL AND GROUND BUS.
7. COORDINATE INSTALLATION OF WALL MOUNTED EXIT LIGHT WITH MOUNTING OF EF-1 MECHANICAL EQUIPMENT. REFER TO MECHANICAL DRAWINGS.

GENERAL NOTES

A. VISIT PROJECT SITE BEFORE SUBMISSION OF BID AND BECOME FAMILIAR WITH EXISTING CONDITIONS, LOCATIONS OF UTILITIES, AND EXTENT OF DEMOLITION REQUIRED.
B. CONFIRM CAPACITY OF EXISTING TRANSFORMER AND COORDINATE UPGRADE WITH UTILITY IF NEEDED. PROVIDE TRENCHING, CONDUIT, METER BASE, CONCRETE PAD AND OTHER ITEMS AS REQUIRED.
C. PROVIDE CONTROL POWER SOURCE FOR ALL STARTERS AND CONTROL PANELS NOT SUPPLIED WITH CONTROL POWER TRANSFORMERS. INSTALL AND CONNECT ALL CONTROL DEVICES IN ACCORDANCE WITH MANUFACTURERS' RECOMMENDATIONS.
D. VERIFY ELECTRICAL POWER REQUIREMENTS FOR ALL EQUIPMENT WITH SUBMITTALS. PROVIDE CIRCUITS AND FUSES SIZED IN ACCORDANCE WITH MANUFACTURERS' RECOMMENDATIONS.
E. MAINTAIN CODE REQUIRED WORKING CLEARANCE AT ALL ELECTRICAL PANELS, DISCONNECT SWITCHES AND STARTERS.
F. PROVIDE DISCONNECT SWITCH FOR ANY HARDWIRED EQUIPMENT NOT SUPPLIED WITH DISCONNECTING MEANS.
G. SEE MECHANICAL DRAWINGS AND SPECIFICATIONS FOR LOCATIONS AND CONTROL REQUIREMENTS FOR MECHANICAL EQUIPMENT AND INSTALL STARTERS, DISCONNECT SWITCHES AND CONVENIENCE RECEPTACLES THAT MAY BE FURNISHED WITH THE EQUIPMENT.
H. COORDINATE EXACT LOCATION OF ALL CEILING MOUNTED LIGHT FIXTURES WITH ARCHITECTURAL DRAWINGS. PROVIDE FIXTURES COMPATIBLE WITH CEILING TYPE INSTALLED.
I. LIGHTING FIXTURES FOR EMERGENCY USE SHALL BE PROVIDED WITH INTEGRAL BATTERY. THOSE FIXTURES SHALL BE CIRCUITED SUCH THAT THEY AUTOMATICALLY SWITCH TO BATTERY OPERATION UPON FAILURE OF POWER TO CIRCUIT. EXIT LIGHTS SHALL BE UNSWITCHED.
J. CONNECT SINGLE STATION CEILING MOUNTED SMOKE DETECTORS SUCH THAT WHEN ONE GOES INTO ALARM, ALL WILL SOUND ALARM.
K. ALL RECEPTACLES ON DEDICATED CIRCUITS SHALL BE RATED NO LESS THAN CIRCUIT OVER CURRENT DEVICE.
L. LIGHTS IN EACH OFFICE WITH MORE THAN ONE FIXTURE SHALL BE FURNISHED WITH A BI-LEVEL DRIVER (50% / 100%) TO FACILITATE DUEL LEVEL SWITCHING. PROVIDE A THREE POSITION SWITCH (OFF / 50% / 100%) IN EACH OFFICE.
M. EXTERIOR LIGHTING SHALL BE TURNED ON AT DUSK BY A PHOTOCELL AND TURNED OFF AT A PRESET TIME BY A TIME SWITCH. PHOTOCELL SHELL BE MOUNTED ON BUILDING NEAR ROOF. TIME SWITCH SHALL BE MOUNTED ADJACENT TO ELECTRICAL PANEL. TIME SWITCH SHALL BE SEVEN DAY WITH RESERVE POWER.

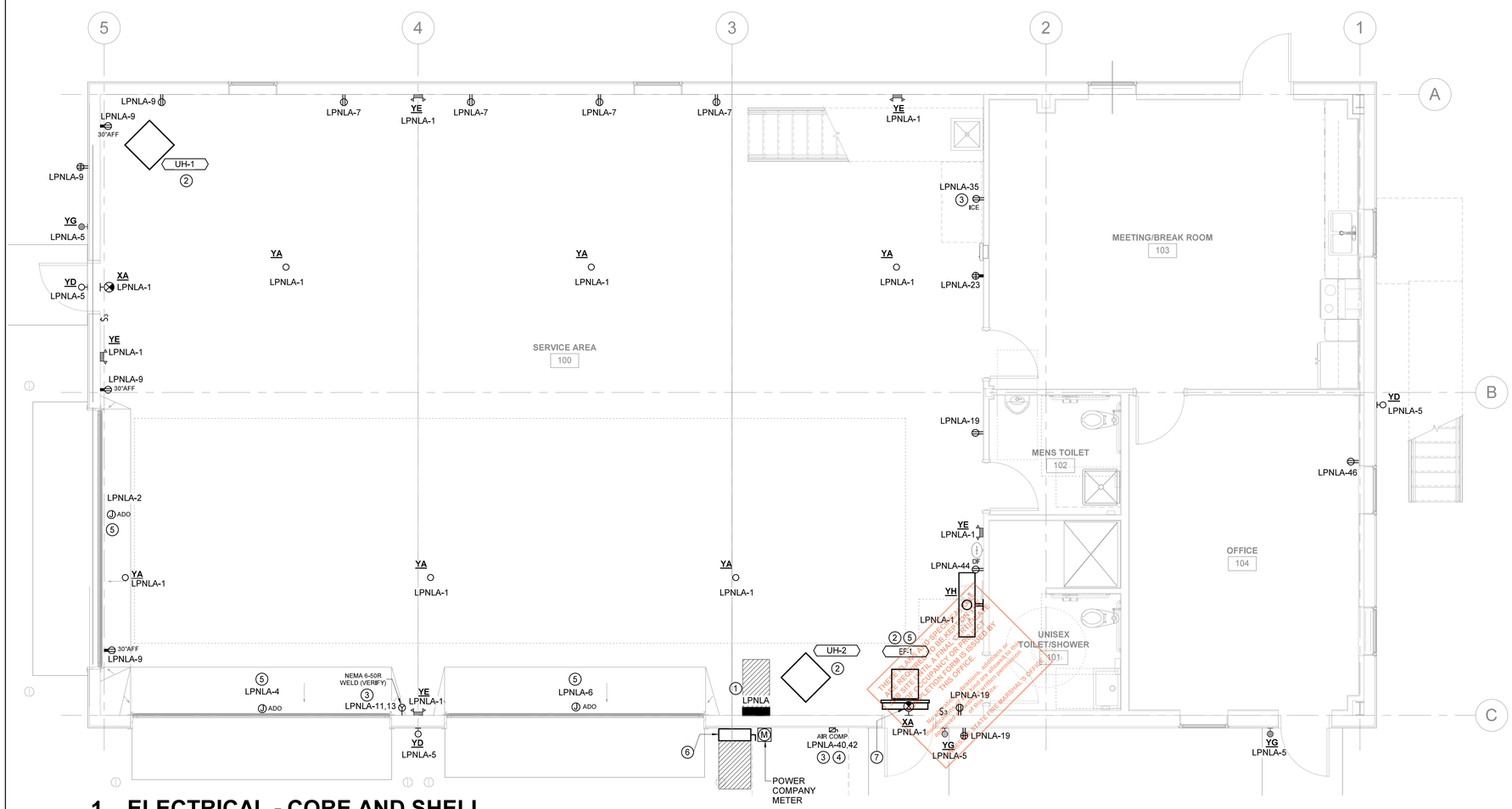

1 ELECTRICAL - CORE AND SHELL

0 2' 4' 6'

PROJECT NO.	39999-3609-04
PIN NO.	131121.0

REVISIONS

DESCRIPTION	BY	DATE

TDOT HENDERSON COUNTY MAINTENANCE BUILDING

370 ROCK MILAM ROAD
CEDAR GROVE, TN 38321

PHASE: CONSTRUCTION

DATE: AUGUST 18, 2023

Wold HFR DESIGN
214 Centerview Drive Suite 300
Brentwood, TN 37027
woldae.com phone: 615.370.8500
fax: 615.370.8530

SSR Smith Seckman Reid, Inc.
2650 Thousand Oaks Boulevard,
Suite 4200
Memphis, TN 38118
(901) 683-3900
FAX: (901) 683-3990
www.ssr-inc.com
SSR Project #: 22640620

SEALED BY

GREGORIO LOBO
REGISTERED ENGINEER
AGRICULTURE
POWER
No. 122710
STATE OF TENNESSEE
08.18.2023

STATE OF TENNESSEE
DEPARTMENT OF
TRANSPORTATION

ELECTRICAL CORE AND SHELL E1.0

SHEET 28 OF 34

FIELD SET TFM# 21349 PROJECT# 2024-04-17-10

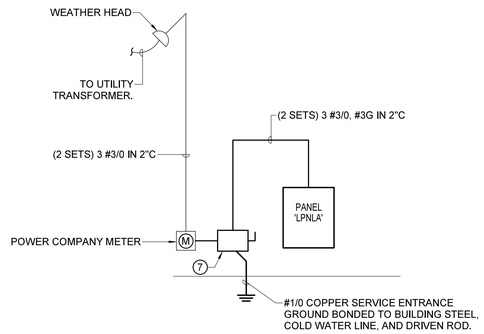

POWER RISER DIAGRAM - BUILD-OUT

NOT TO SCALE

SHEET KEYED NOTES

1. PANEL AIC RATING IS BASED ON ASSUMPTION OF 75KVA UTILITY TRANSFORMER. CONTACT ELECTRICAL ENGINEER IF AVAILABLE FAULT CURRENT EXCEEDS 22,000 AMPS.
2. CONFIRM BREAKER SIZE WITH EQUIPMENT MANUFACTURER AND ADJUST WIRING AS REQUIRED. COORDINATE MOUNTING HEIGHT AND EXACT LOCATION WITH MECHANICAL.
3. COORDINATE EXACT MOUNTING HEIGHT AND LOCATION WITH OWNER.
4. PROVIDE 60/2 NON FUSED DISCONNECT FOR AIR COMPRESSOR. PROVIDE 2#6, 1#10G, IN 3/4"C. ELECTRICAL CONTRACTOR SHALL COORDINATE INSTALLATION WITH EQUIPMENT PROVIDER.
5. PROVIDE LOCAL DISCONNECT AT FLOOR LEVEL. COORDINATE EXACT REQUIREMENTS WITH MANUFACTURER AND LOCATION WITH OWNER.
6. PROVIDE MULTI-STATION 110 DBA DEVICE TO COMPLY WITH NFPA 72 SECTION 18.4.5 FOR SMOKE DETECTION WITHIN 16' OF HEAD OF FUTURE COTS. MAKE 120V CONNECTION AND MAKE CONTROL CONNECTIONS SO THAT IF ONE DEVICE DETECTS SMOKE, ALL DEVICES ALARM. PROVIDE BATTERY BACKUP TO MAINTAIN POWER FOR 24 HOURS WITH ALARM FOR 15 MINUTES AFTERWARDS AT FULL POWER.
7. PROVIDE 400 AMP, 2-POLE, 3-WIRE, NEMA 3R, FUSIBLE, QUICK CONNECT DOUBLE THROW SAFETY SWITCH WITH INTEGRATED CAMLOCK RECEPTACLES. THE SAFETY SWITCH WILL CONNECT THE ELECTRICAL UTILITY TO THE BUILDING IN THE UPPER POSITION AND WILL ENERGIZE THE CAMLOCK RECEPTACLES IN THE LOWER POSITION. QUICK CONNECT DOUBLE THROW SAFETY SWITCH TO BE EATON CATALOG NUMBER DT225NNRKLC OR APPROVED EQUAL. PROVIDE 400 AMP FUSES IN BOTH UPPER AND LOWER POSITION. PROVIDE BONDING JUMPER BETWEEN NEUTRAL AND GROUND BUS.
8. COORDINATE LIGHT FIXTURES WITH TECHNOLOGY OVERHEAD RACKS.

GENERAL NOTES

A. VISIT PROJECT SITE BEFORE SUBMISSION OF BID AND BECOME FAMILIAR WITH EXISTING CONDITIONS, LOCATIONS OF UTILITIES, AND EXTENT OF DEMOLITION REQUIRED.
B. CONFIRM CAPACITY OF EXISTING TRANSFORMER AND COORDINATE UPGRADE WITH UTILITY IF NEEDED. PROVIDE TRENCHING, CONDUIT, METER BASE, CONCRETE PAD AND OTHER ITEMS AS REQUIRED.
C. PROVIDE CONTROL POWER SOURCE FOR ALL STARTERS AND CONTROL PANELS NOT SUPPLIED WITH CONTROL POWER TRANSFORMERS. INSTALL AND CONNECT ALL CONTROL DEVICES IN ACCORDANCE WITH MANUFACTURERS' RECOMMENDATIONS.
D. VERIFY ELECTRICAL POWER REQUIREMENTS FOR ALL EQUIPMENT WITH SUBMITTALS. PROVIDE CIRCUITS AND FUSES SIZED IN ACCORDANCE WITH MANUFACTURERS' RECOMMENDATIONS.
E. MAINTAIN CODE REQUIRED WORKING CLEARANCE AT ALL ELECTRICAL PANELS, DISCONNECT SWITCHES AND STARTERS.
F. PROVIDE DISCONNECT SWITCH FOR ANY HARDWIRED EQUIPMENT NOT SUPPLIED WITH DISCONNECTING MEANS.
G. SEE MECHANICAL DRAWINGS AND SPECIFICATIONS FOR LOCATIONS AND CONTROL REQUIREMENTS FOR MECHANICAL EQUIPMENT AND INSTALL STARTERS, DISCONNECT SWITCHES AND CONVENIENCE RECEPTACLES THAT MAY BE FURNISHED WITH THE EQUIPMENT.
H. COORDINATE EXACT LOCATION OF ALL CEILING MOUNTED LIGHT FIXTURES WITH ARCHITECTURAL DRAWINGS. PROVIDE FIXTURES COMPATIBLE WITH CEILING TYPE INSTALLED.
I. LIGHTING FIXTURES FOR EMERGENCY USE SHALL BE PROVIDED WITH INTEGRAL BATTERY. THOSE FIXTURES SHALL BE CIRCUITED SUCH THAT THEY AUTOMATICALLY SWITCH TO BATTERY OPERATION UPON FAILURE OF POWER TO CIRCUIT. EXIT LIGHTS SHALL BE UNSWITCHED.
J. CONNECT SINGLE STATION CEILING MOUNTED SMOKE DETECTORS SUCH THAT WHEN ONE GOES INTO ALARM, ALL WILL SOUND ALARM.
K. ALL RECEPTACLES ON DEDICATED CIRCUITS SHALL BE RATED NO LESS THAN CIRCUIT OVER CURRENT DEVICE.
L. LIGHTS IN EACH OFFICE WITH MORE THAN ONE FIXTURE SHALL BE FURNISHED WITH A BI-LEVEL DRIVER (50% / 100%) TO FACILITATE DUEL LEVEL SWITCHING. PROVIDE A THREE POSITION SWITCH (OFF / 50% / 100%) IN EACH OFFICE.
M. EXTERIOR LIGHTING SHALL BE TURNED ON AT DUSK BY A PHOTOCELL AND TURNED OFF AT A PRESET TIME BY A TIME SWITCH. PHOTOCELL SHELL BE MOUNTED ON BUILDING NEAR ROOF. TIME SWITCH SHALL BE MOUNTED ADJACENT TO ELECTRICAL PANEL. TIME SWITCH SHALL BE SEVEN DAY WITH RESERVE POWER.

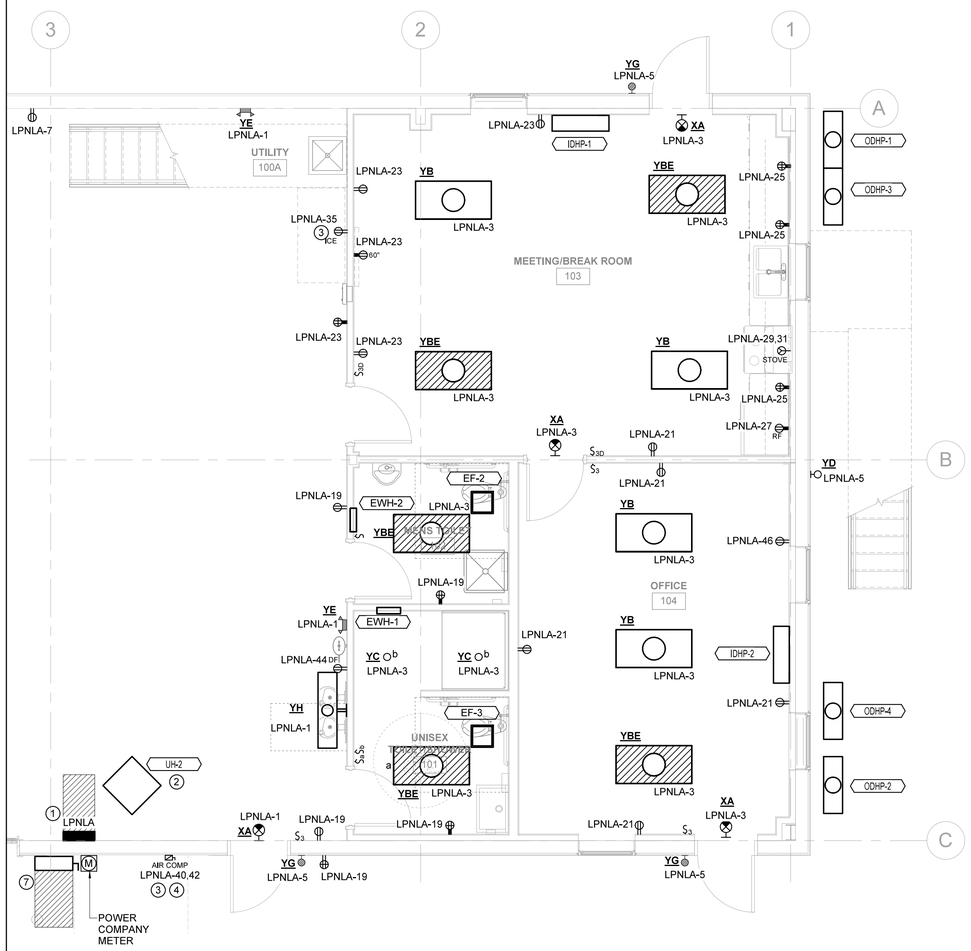

1 ELECTRICAL FIRST FLOOR - BUILD-OUT

0 2' 4' 6'

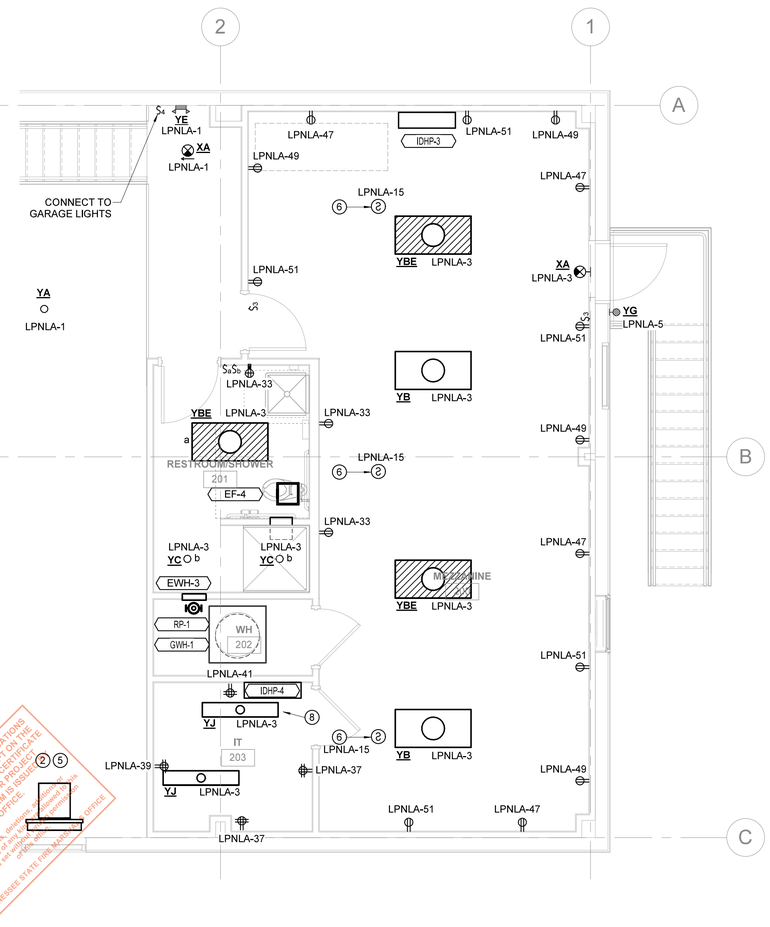

2 ELECTRICAL MEZZANINE PLAN

0 2' 4' 6'

THESE PLANS AND SPECIFICATIONS ARE REQUIRED TO BE KEPT ON THE JOB SITE UNTIL A FINAL CERTIFICATE OF OCCUPANCY FOR PROJECT COMPLETION IS ISSUED BY THIS OFFICE.
No alterations, deviations, additions or other modifications of any kind are permitted unless approved in writing by the permitting office.
TENNESSEE STATE FIRE MARSHAL'S OFFICE

PROJECT NO.	39999-3609-04
PIN NO.	131121.0

REVISIONS

DESCRIPTION	BY	DATE

TDOT HENDERSON COUNTY MAINTENANCE BUILDING
370 ROCK MILAM ROAD
CEDAR GROVE, TN 38321

PHASE: CONSTRUCTION
DATE: AUGUST 18, 2023

Wold HFR DESIGN
214 Centerview Drive Suite 300
Brentwood, TN 37027
woldae.com phone: 615.370.8500
fax: 615.370.8530

SSR Smith Seckman Reid, Inc.
2650 Thousand Oaks Boulevard, Suite 4200
Memphis, TN 38118
(901) 683-3900
FAX: (901) 683-3990
www.ssr-inc.com
SSR Project #: 22640620

SEALED BY

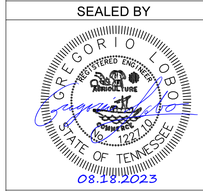

STATE OF TENNESSEE
DEPARTMENT OF TRANSPORTATION

ELECTRICAL BUILD-OUT & MEZZANINE
E1.1

SHEET 29 OF 34

FIELD SET TFM# 21349 PROJECT# 2024-04-17-10

Name: LPNLA

Location: SERVICE AREA 100
Supply From: UTILITY XFMR
Mounting: SURFACE
Enclosure: NEMA 1
Notes:

Volts: 120/240 Single
Phases: 1
Wires: 3

A.I.C. Rating: 22,000
Mains Type: MCB
Bus Rating: 400 A
MCB Rating: 400 A

CKT	Circuit Description	Notes	Trip	Poles	A (VA)		B (VA)		Poles	Trip	Notes	Circuit Description	CKT
1	Ltg		20	1	959	1000			1	20		Motorized Door	2
3	Ltg		20	1			829	1000	1	20		Motorized Door	4
5	Exterior Ltg		20	1	288	1000			1	20		Motorized Door	6
7	Rec		20	1			720	1440	2	15		IDHP-1/ ODHP-1	8
9	Rec		20	1	900	1440			--	--		--	10
11	Welding Rec	2	50	2			4800	1080	2	15		IDHP-2/ ODHP-2	12
13	--		--	--	4800	1080			--	--		--	14
15	Smoke Detection System		20	1			180	1440	2	15		IDHP-3/ ODHP-3	16
17	SPARE		20	1	0	1440			--	--		--	18
19	Rec		20	1			900	1020	2	20		EF-1	20
21	Rec		20	1	900	1020			--	--		--	22
23	Rec		20	1			900	180	1	20		EF-2, 3 & 4	24
25	Kitchen GFCI Rec		20	1	540	1500			1	20		EWH-1	26
27	Refrigerator Rec		20	1			900	1500	1	20		EWH-2	28
29	Stove Rec	2	50	2	5050	1500			1	20		EWH-3	30
31	--		--	--			5050	60	1	20		GWH-1	32
33	Mezzanine Rec		20	1	540	60			1	20		RP-1	34
35	Ice Machine	1	20	1			180	396	1	15		UH-1	36
37	Rec - IT Room		20	1	720	396			1	15		UH-2	38
39	Rec - IT Room		20	1			360	3000	2	60		Air Compressor	40
41	Rec - IT Room		20	1	360	3000			--	--		--	42
43	IDHP-4/ODHP-4		15	2			1080	1200	1	20	1	Drinking Fountain Rec	44
45	--		--	--	1080	180			1	20		TTB	46
47	Mezzanine Rec		20	1			720	0	1	20		SPARE	48
49	Mezzanine Rec		20	1	720	0			1	20		SPARE	50
51	Mezzanine Rec		20	1			900	0	1	20		SPARE	52
53	SPARE		20	1	0	0			1	20		SPARE	54
55	SPARE		20	1			0	0	1	20		SPARE	56
57	SPARE		20	1	0	0			1	20		SPARE	58
59	SPARE		20	1			0	0	1	20		SPARE	60
					Total Load:		30473 VA	29835 VA					
					Total Amps:		254 A	249 A					

Load Classification	Connected Load	Demand Factor	Demand Load	Panel Totals	
Htg	5352 VA	100.00%	5352 VA		
Kitcheq	900 VA	100.00%	900 VA	**Total Conn. Load:**	60308 VA
Ltg	2076 VA	125.00%	2595 VA	**Total Demand:**	56907 VA
Pwr	9600 VA	100.00%	9600 VA	**Total Conn. Current:**	251 A
Rec	20840 VA	73.99%	15420 VA	**Total Demand Current:**	237 A

Notes:
1. PROVIDE GFCI BREAKER AS REQUIRED.
2. PROVIDE 2#8, #10G IN 1/2" C TO RECEPTACLE.

MECHANICAL EQUIPMENT CONNECTION SCHEDULE

GENERAL NOTES:
NONE.

REMARKS:
NONE:

ABBREVATIONS:
FDS = FUSED DISCONNECT SWITCH
NFDS = NON-FUSED DISCONNECT SWITCH
CMSD = COMBINATION MOTOR STARTER/DISCONNECT SWITCH
SMTO = MANUAL MOTOR STARTER WITH THERMAL OVERLOAD
VFD = VARIABLE FREQUENCY DRIVE
INT = INTEGRAL DISCONNECT
CP = CONTROL PANEL

TAG	DESCRIPTION	LEVEL	VOLTAGE	PHASE	H.P.	KVA	AMPS	PANEL	CKT.	DISCONNECT DISC. TYPE	DISCONNECT RATING	WIRE SIZE	CONDUIT SIZE	REMARKS
EF-1	EXHAUST FAN	FIRST FLOOR	240 V	1	2	2.0	8.5 A	LPNLA	20,22	NFDS	20A/2P	2 #12, #12G	1/2"	--
EF-2	EXHAUST FAN	FIRST FLOOR	120 V	1		0.1	0.5 A	LPNLA	24	--	--	2 #12, #12G	1/2"	COORDINATE WITH MECHANICAL SUBMITTALS AND PROVIDE 20A/1P DISCONNECT FOR NEMA 5-20R RECEPTACLE AS REQUIRED.
EF-3	EXHAUST FAN	FIRST FLOOR	120 V	1		0.1	0.5 A	LPNLA	24	--	--	2 #12, #12G	1/2"	COORDINATE WITH MECHANICAL SUBMITTALS AND PROVIDE 20A/1P DISCONNECT FOR NEMA 5-20R RECEPTACLE AS REQUIRED.
EF-4	EXHAUST FAN	MEZZANINE	120 V	1	-	0.1	0.5 A	LPNLA	24	--	--	2 #12, #12G	1/2"	COORDINATE WITH MECHANICAL SUBMITTALS AND PROVIDE 20A/1P DISCONNECT FOR NEMA 5-20R RECEPTACLE AS REQUIRED.
EWH-1	ELECTRIC WALL HEATER	FIRST FLOOR	120 V	1	-	1.5	12.5 A	LPNLA	26	INT	--	2 #12, #12G	1/2"	--
EWH-2	ELECTRIC WALL HEATER	FIRST FLOOR	120 V	1	-	1.5	12.5 A	LPNLA	28	INT	--	2 #12, #12G	1/2"	--
EWH-3	ELECTRIC WALL HEATER	MEZZANINE	120 V	1	-	1.5	12.5 A	LPNLA	30	INT	--	2 #12, #12G	1/2"	--
GWH-1	GAS WATER HEATER	MEZZANINE	120 V	1	-	0.1	0.5 A	LPNLA	32	--	--	2 #12, #12G	1/2"	COORDINATE WITH PLUMBING SUBMITTALS AND PROVIDE 20A/1P DISCONNECT FOR NEMA 5-20R RECEPTACLE AS REQUIRED.
IDHP-1	INDOOR HEAT PUMP	FIRST FLOOR	240 V	1	-	2.9	12 A			INT	--	2 #12, #12G	1/2"	FED THROUGH ODHP-1
IDHP-2	INDOOR HEAT PUMP	FIRST FLOOR	240 V	1	-	2.2	9 A			INT	--	2 #12, #12G	1/2"	FED THROUGH ODHP-2
IDHP-3	INDOOR HEAT PUMP	MEZZANINE	240 V	1	-	2.9	12 A			INT	--	2 #12, #12G	1/2"	FED THROUGH ODHP-3
IDHP-4	INDOOR HEAT PUMP	MEZZANINE	240 V	1	-	2.2	9 A			INT	--	2 #12, #12G	1/2"	FED THROUGH ODHP-4
ODHP-1	OUTDOOR HEAT PUMP	FIRST FLOOR	240 V	1	-	2.9	12 A	LPNLA	8,10	NFDS	20A/2P	2 #12, #12G	1/2"	--
ODHP-2	OUTDOOR HEAT PUMP	FIRST FLOOR	240 V	1	-	2.2	9 A	LPNLA	12,14	NFDS	20A/2P	2 #12, #12G	1/2"	--
ODHP-3	OUTDOOR HEAT PUMP	FIRST FLOOR	240 V	1	-	2.9	12 A	LPNLA	16,18	NFDS	20A/2P	2 #12, #12G	1/2"	--
ODHP-4	OUTDOOR HEAT PUMP	FIRST FLOOR	240 V	1	-	2.2	9 A	LPNLA	43,45	NFDS	20A/2P	2 #12, #12G	1/2"	--
RP-1	RECIRC. PUMP	MEZZANINE	120 V	1	1/25	0.1	0.5 A	LPNLA	34	--	--	2 #12, #12G	1/2"	PROVIDE STARTER AND DISCONNECT AS REQUIRED
UH-1	UNIT HEATER	FIRST FLOOR	120 V	1	-	0.4	3.3 A	LPNLA	36	INT	--	2 #12, #12G	1/2"	PROVIDE STARTER AS REQUIRED
UH-2	UNIT HEATER	FIRST FLOOR	120 V	1	-	0.4	3.3 A	LPNLA	38	INT	--	2 #12, #12G	1/2"	PROVIDE STARTER AS REQUIRED

LUMINAIRE SCHEDULE

GENERAL NOTES:
1. REFER TO AND COORDINATE WITH ARCHITECTURAL REFLECTED CEILING PLANS AND ELEVATIONS FOR FINAL FIXTURE LOCATIONS, HEIGHTS, CEILING TYPES, MOUNTINGS, FINISHES, ETC.
2. WHERE SUSPENDED FIXTURES ARE REQUIRED, REFER TO REFLECTED CEILING PLANS AND ELEVATIONS FOR MOUNTING HEIGHT TO PROVIDE PROPER LENGTH OF FIXTURE SUPPORT CABLE. UTILIZE ADJUSTABLE CABLE GRIPPERS FOR FINAL SETPOINT. ONCE FIXTURES ARE LEVELLED, REMOVE EXCESS CABLING. PROVIDE MATCHING FEED CANOPY AT EACH SUPPORT LOCATION AS DIRECTED BY.
3. WHERE FIXTURES ARE SHOWN WITH CHAIN HANGERS, PROVIDE LONGER CHAIN, IF NEEDED, TO MOUNT AROUND OBSTRUCTIONS (I.E. DUCTWORK, PIPING, STRUCTURE, ETC.) TO AVOID SHADOWING ON SPACE/EQUIPMENT BELOW.

TYPE	DESCRIPTION	MANUFACTURER/SERIES	LAMPS QTY.	LAMPS	MIN. LUMENS	COLOR	INPUT WATTS	VOLTAGE	BALLAST/DRIVER	MOUNTING	REMARKS
XA	LED EDGE LIT SINGLE FACE EXIT SIGN	LITHONIA EDGR	--	LED	N/A	N/A	3.0	UNIV	LED DRIVER	SEMI-RECESSED	--
YA	LED STEM MOUNTED, INDUSTRIAL HIGHT BAY	RUGGED GRADE LIGHTING #RGL-TITAN3-150WRB	--	LED	21000	3500K	150.0	120V	LED DRIVER (1-10V DIMMING)	15 FEET ABOVE FINISHED FLOOR	--
YB	LED SURFACE MOUNTED WRAPAROUND	COLUMBIA #LAW4-35HL-EDU	--	LED	5627	3500K	51.0	120V	LED DRIVER (1-10V DIMMING)	--	--
YBE	LED SURFACE MOUNTED WRAPAROUND	COLUMBIA #LAW4-35HL-EDU	--	LED	5627	3500K	51.0	120V	LED DRIVER (1-10V DIMMING)	--	--
YC	4" LED DOWNLIGHT	LITHONIA # LDN4 35/10 L04AR LSS MVOLT	--	LED	1045	3500K	11.0	120V	LED DRIVER	RECESSED	--
YD	EXTERIOR WALL PACK	HUBBELL #WGH-133L-4K-LM	--	LED	8989	SEE REMARKS	76.0	120V	LED DRIVER	SURFACE MOUNTED	4000K COLOR TEMP.
YE	LED EMERGENCY LIGHTING UNIT W/ 3.6V NICAD BATTERY	EXITRONIX #LED-90 SERIES	--	LED	N/A	N/A	3.0	120V	--	SURFACE MOUNTED	--
YG	EMERGENCY EGRESS LIGHT	LITHONIA #AFF PEL UVOLT LTP SDRT FCT	--	LED	635	SEE REMARKS	12.0	120V	--	SURFACE MOUNTED	4000K COLOR TEMP.
YH	LED WALL DIRECT	CURRENT/#67L-W-D-4-4-DM-X-35K-D100-D01-1C-UNV	--	LED	4000	3500K	34.0	120V	LED DRIVER	WALL MOUNTED	FINISH/COLOR BY ARCH
YJ	LED WRAPAROUND	COLUMBIA #LAW4-40MW-EU	--	LED	3787	3500K	31.0	120/277V	LED DRIVER	--	--

ELECTRICAL SPECIFICATIONS

SCOPE
A. INCLUDES THE FURNISHING OF ALL LABOR, SUPERVISION, MATERIALS, EQUIPMENT, TOOLS, ETC., REQUIRED FOR THE ELECTRICAL SYSTEMS AS SHOWN AND DESCRIBED IN THESE DRAWINGS.
B. THE WORK SHALL INCLUDE, BUT IS NOT NECESSARILY LIMITED TO, THE FOLLOWING:
1. BUILDING WIRE AND CABLE
2. WIRING DEVICES
3. ELECTRICAL BOXES AND FITTINGS
4. CIRCUIT AND MOTOR DISCONNECTS
5. SUPPORTING DEVICES
6. SEISMIC RESTRAINTS
7. ELECTRICAL IDENTIFICATION
8. GROUNDING
9. LIGHTING
10. CONDUIT FOR AUXILIARY
11. CIRCUITS FOR HVAC EQUIPMENT

RELATED WORK
A. THE FOLLOWING WORK RELATED TO THE ELECTRICAL WORK.
B. HEATING, VENTILATING, AIR CONDITIONING AND PLUMBING EQUIPMENT, INCLUDING MOTORS, MOTOR STARTERS AND CONTROL EQUIPMENT WILL BE FURNISHED AND INSTALLED UNDER DIVISION 15.
C. PAINTING, EXCEPT REPAIR OF FACTORY APPLIED FINISHES ON ELECTRICAL EQUIPMENT.

CODES AND PERMITS
A. ALL WORK SHALL BE INSTALLED IN ACCORDANCE WITH THE REQUIREMENTS OF THE 2017 EDITION OF THE NATIONAL ELECTRICAL CODE, NFPA 70, 2012 INTERNATIONAL BUILDING CODE, 2012 INTERNATIONAL ENERGY CONSERVATION CODE AND THE LATEST EDITION OF ALL LOCAL OR STATE CODES, LAWS, AND ORDINANCES.

TRADE NAMES AND EQUALS
A. MANUFACTURER'S TRADE NAMES OR CATALOG NUMBERS USED IN THESE SPECIFICATIONS AND INDICATED ON THE DRAWINGS DENOTE TYPE, SIZE, QUALITY, AND DESIGN OF EQUIPMENT REQUIRED.
B. WHERE EQUIPMENT IS SPECIFIED AS "EQUAL", OR "APPROVED EQUAL", IT SHALL MEAN EQUAL IN THE OPINION OF THE ENGINEER OF RECORD. THIS CONTRACTOR IS TO OFFER SUBSTITUTIONS FOR CONSIDERATION AS EQUAL AFTER THE CONTRACT IS SIGNED; HOWEVER, BUT SHALL BE PREPARED TO FURNISH SPECIFIED MATERIALS WHERE SUBSTITUTIONS ARE NOT APPROVED.

MATERIAL AND EQUIPMENT
A. ALL MATERIALS AND EQUIPMENT SHALL BE NEW AND OF THE QUALITY SPECIFIED.
B. MATERIAL OR EQUIPMENT THAT HAS BEEN STORED OUTDOORS UNPROTECTED FOR LONG PERIODS OF TIME OR OTHERWISE DAMAGED IS NOT ACCEPTABLE AS NEW MATERIAL.
C. APPARATUS AND MATERIALS USED IN THIS WORK WHICH ARE SUBJECT TO APPROVAL OF UNDERWRITERS LABORATORIES (UL) SHALL BEAR THE UL LABEL OR BE UNDERWRITERS LISTED.

DELIVERY, STORAGE, AND HANDLING OF MATERIAL AND EQUIPMENT
A. THE CONTRACTOR SHALL BE RESPONSIBLE FOR THE PURCHASE, DELIVERY AND STORAGE OF ALL MATERIALS AND EQUIPMENT INDICATED TO BE SUPPLIED UNDER THIS SECTION OF THE SPECIFICATIONS, AND IT SHALL BE HIS RESPONSIBILITY TO SCHEDULE THE DELIVERY OF MATERIALS AND EQUIPMENT AT SUCH STAGES OF THE WORK AS WILL PERMIT UNINTERRUPTED CONSTRUCTION OF ALL PHASES OF THE WORK.
B. WHERE OWNER FURNISHED EQUIPMENT IS TO BE TURNED OVER TO THIS CONTRACTOR FOR INSTALLATION, IT SHALL BE THE RESPONSIBILITY OF THIS CONTRACTOR TO RECEIVE SUCH EQUIPMENT AND STORE IN A SAFE, DRY LOCATION.
C. PERFORM ALL REQUIRED RIGGING, HOISTING, TRANSPORTING, ETC., OF ALL EQUIPMENT FURNISHED, AND FURNISH ANY ADDITIONAL STRUCTURAL MEMBERS, AS MAY BE REQUIRED. FOR THE PROPER SUPPORT OF ANY AND ALL EQUIPMENT FURNISHED HEREUNDER.

ACCURACY OF DATA
A. THE DRAWINGS ARE GENERALLY DIAGRAMMATIC, AND EXCEPT WHERE DIMENSIONS ARE SHOWN, ARE NOT INTENDED TO SHOW THE EXACT LOCATIONS OF OUTLETS, CONDUITS, SWITCHES, FIXTURES, ETC. ALL WORK SHALL BE INSTALLED AS NEARLY AS POSSIBLE IN THE LOCATIONS INDICATED, WITH ONLY SUCH MINOR ADJUSTMENTS AS WILL BE REQUIRED TO AVOID INTERFERENCES WITH STRUCTURE OR THE WORK OF OTHER TRADES.
B. THE DRAWINGS ARE NOT INTENDED TO SHOW ALL JUNCTION OR PULL BOXES, FITTINGS AND CONNECTIONS, AND DETAILS OF WORK TO BE DONE. THIS CONTRACTOR SHALL SUPPLY ALL NECESSARY BOXES, FITTINGS AND CONNECTIONS FOR COMPLETE INSTALLATION IN A SATISFACTORY MANNER.
C. ANY OFFSETS IN CONDUIT REQUIRED OR NECESSARY TO AVOID INTERFERENCES WITH STRUCTURE, OR THE WORK OF OTHER TRADES, ETC., SHALL BE MADE AT NO ADDITIONAL COST TO THE OWNER.

COORDINATION
A. COORDINATE WORK WITH THAT OF OTHER SUBCONTRACTORS ON THE JOB AND ALSO WITH THAT OF THE OWNER IN ORDER THAT THERE BE NO DELAY IN THE PROPER INSTALLATION AND COMPLETION OF THE WORK.

MANUFACTURER'S RECOMMENDATIONS
A. UNLESS SPECIFICALLY INDICATED OTHERWISE, ALL EQUIPMENT AND MATERIALS SHALL BE INSTALLED IN ACCORDANCE WITH THE RECOMMENDATION OF THE MANUFACTURER. A COPY OF THE MANUFACTURER'S INSTALLATION RECOMMENDATIONS SHALL BE KEPT IN THE JOB SUPERINTENDENT'S OFFICE AND SHALL BE AVAILABLE TO THE OWNER'S REPRESENTATIVE AT ALL TIMES.

TESTS
A. TEST ALL ELECTRICAL WIRING FOR CONTINUITY, SHORTS, IMPROPER GROUNDS AND INSULATION RESISTANCE. MOTORS SHALL BE CHECKED FOR PROPER ROTATION AND BRANCH CIRCUIT AND OVERLOAD PROTECTION. PANELBOARDS SHALL BE CHECKED FOR BALANCED LOADING AND CORRECT PHASE ROTATION. DISCREPANCIES SHALL BE CORRECTED. THIS CONTRACTOR SHALL FURNISH TEST EQUIPMENT AND MATERIAL, AND SHALL BE RESPONSIBLE FOR REPLACEMENT OR REPAIR OF DAMAGE DUE TO TEST FAILURES.
B. AFTER INSTALLATION IS COMPLETE, VOLTAGE MEASUREMENTS SHALL BE MADE AT EACH PANELBOARD TO VERIFY PROPER SYSTEM VOLTAGES. VOLTAGE SHALL BE MEASURED UNDER LOAD CONDITIONS WHERE POSSIBLE. VOLTAGE READINGS SHALL BE RECORDED.
C. AFTER ALL TESTS HAVE BEEN COMPLETED. THIS CONTRACTOR SHALL CLEAN ALL LIGHT FIXTURES AND REPLACE ANY DEFECTIVE COMPONENTS. ALL EQUIPMENT AND CONDUIT SHALL BE CLEANED AND LEFT IN WORKING ORDER. ALL DEBRIS CREATED BY THE EXECUTION OF THE ELECTRICAL WORK SHALL BE REMOVED BY THIS CONTRACTOR. THIS CONTRACTOR SHALL TAKE ALL NECESSARY PRECAUTIONS TO KEEP PANELS, ESPECIALLY CIRCUIT BREAKER HANDLES, CLEAN DURING CONSTRUCTION.

BUILDING WIRE, CABLE AND CONNECTORS
A. BUILDING WIRE AND CONNECTORS SHALL BE UL LISTED AND LABELED. COMPLY WITH NEMA, ICEA, ANSI AND ASTM STANDARDS PERTAINING TO MATERIALS, CONSTRUCTION AND TESTING OF BUILDING WIRE AND CABLE.
B. EXCEPT AS OTHERWISE INDICATED, PROVIDE WIRE, CABLE AND CONNECTORS OF MANUFACTURER'S STANDARD MATERIALS, AS INDICATED BY PUBLISHED PRODUCT INFORMATION, DESIGNED AND CONSTRUCTED AS RECOMMENDED BY MANUFACTURER AND AS REQUIRED FOR THE INSTALLATION.
C. PROVIDE FACTORY FABRICATED 600 VOLT INSULATED BUILDING WIRE OF SIZES, RATINGS, MATERIALS, AND TYPES INDICATED BELOW:
1. UL TYPE: THWN - WET OR DRY LOCATIONS
2. UL TYPE: SA - FIXTURE WIRING ONLY
3. MATERIAL COPPER
D. CONDUCTORS #10 AWG AND SMALLER: SOLID OR STRANDED CONDUCTORS#8 AWG AND LARGER CONCENTRIC-LAY-STRANDED (STANDARD FLEXIBILITY)
E. CONDUCTOR IDENTIFICATION: CONDUCTORS SHALL BE IDENTIFIED BY COLOR AS FOLLOWS:

	120/240 VOLT SYSTEMS
A PHASE	BLACK
B PHASE	RED
NEUTRAL	WHITE
EQUIPMENT GROUND	GREEN

F. COLOR FOR CONDUCTORS #10 AWG AND SMALLER, COLOR SHALL BE PERMANENT FACTORY APPLIED. CONDUCTORS #8 AWG AND LARGER SHALL BE BLACK WITH 3M OR EQUAL, COLOR CODED PHASE TAPE APPLIED AT THE TERMINATIONS. WHERE TYPE MC CABLE IS USED, CIRCUIT NUMBERS SHALL BE APPLIED AT ALL WIRE SPLICES AND TERMINATIONS.
G. WHEN WIRES ARE INSTALLED IN CONDUIT, SUFFICIENT SLACK SHALL BE ALLOWED TO PERMIT THE CONNECTION OF FIXTURES OR WIRING DEVICES WITHOUT ADDITIONAL SPLICE
H. ALL CONDUCTORS SHALL BE CONTINUOUS FROM OUTLET TO OUTLET OR FROM PANEL TO OUTLET OR DEVICE. NO SPLICES WILL BE PERMITTED IN CONDUIT RUNS.
1. UNLESS OTHERWISE NOTED ON THE PLANS, BRANCH CIRCUITS SHALL BE RUN HOME IN INDIVIDUAL CONDUITS, AS FOLLOWS.
2. ALL POWER AND LIGHTING BRANCH CIRCUIT WIRING SHALL BE RUN HOME IN SEPARATE CONDUITS, AS INDICATED.
3. FEEDERS SHALL BE RUN IN INDIVIDUAL CONDUITS FROM THE FEEDER SOURCE TO THE LOAD TERMINATIONS, AS INDICATED ON THE DRAWINGS. DO NOT COMBINE MULTIPLE FEEDERS IN A WIREWAY OR JUNCTION BOX.
4. USE COMPRESSION TYPE WIRE CONNECTORS FOR STRANDED CONDUCTORS, FOR MOTOR CONNECTIONS, AND ALL OTHER CONNECTIONS OR SPLICES SUBJECT TO VIBRATION. WIRE NUTS MAY BE USED ELSEWHERE.
5. BRANCH CIRCUITS FOR MOTORS, AS INDICATED ON THE DRAWINGS, ARE APPROXIMATE SIZE ONLY. THIS CONTRACTOR SHALL TO OBTAIN THE EXACT RATING OF THE MOTOR OPERATED EQUIPMENT FROM THE MECHANICAL CONTRACTOR, AND SHALL ADJUST THE SIZE OF THE PROTECTIVE DEVICE AND WIRE TO CONFORM TO THE REQUIREMENTS OF THE EQUIPMENT. ALL SUCH CHANGES SHALL BE SUBMITTED TO THE ENGINEER FOR APPROVAL.
6. TORQUE ALL BOLTED LUGS AND CONNECTORS TO TORQUE VALUES RECOMMENDED BY THE EQUIPMENT MANUFACTURER. WHERE TORQUE VALUES ARE NOT GIVEN, USE APPLICABLE TORQUE VALUES GIVEN BY UL STANDARDS #486A AND #486B. IF STUDS ARE COPPER OR STEEL, OR IF STEEL BOLTS ARE USED, USE A BELLEVILLE DISHED WASHER WITH A WIDE SERIES, HEAVY FLAT WASHER. TIGHTEN THE CONNECTION UNTIL THE BELLEVILLE IS FLAT. DO NOT RE-TIGHTEN LATER.
7. MINIMUM SIZE BRANCH CIRCUIT CONDUCTOR SHALL BE #12 AWG.
8. PRIOR TO ENERGIZATION, TEST ALL LIGHTING, POWER, CONTROL, AND SPECIAL CIRCUITS AND ASSOCIATED ELECTRICAL EQUIPMENT FOR LOW INSULATION RESISTANCE, GROUNDS, AND SHORT CIRCUITS.
9. FURNISH AND SET UP ALL METERS, INSTRUMENTS, EQUIPMENT, AND LABOR REQUIRED TO MAKE TESTS, AS INDICATED.
10. REPAIR AND/OR REPLACE AT CONTRACTOR'S EXPENSE, ANY EQUIPMENT DAMAGED IN THE PROCESS OF CONDUCTING THE TESTS.
11. TEST RESULTS SHALL SHOW VALUES NO SMALLER THAN THOSE RECOMMENDED BY THE NEC, IPCEA, IEEE, ANSI AND NEMA.
12. PERFORM CONTINUITY TESTS ON ALL POWER AND CONTROL CIRCUITS, INCLUDING SPARE CONDUCTORS. CHECK PHASE IDENTIFICATION ON POWER CABLES.

BOXES AND FITTINGS
A. COMPLY WITH NEC AS APPLICABLE TO CONSTRUCTION AND INSTALLATION OF ELECTRICAL WIRING BOXES AND FITTINGS.
B. PROVIDE ELECTRICAL BOXES AND FITTINGS WHICH HAVE BEEN UL LISTED AND LABELED.
C. PROVIDE CAST METAL WEATHERPROOF OUTLETS FOR LOCATIONS EXPOSED TO WEATHER OR MOISTURE.
D. EXCEPT WHERE INDICATED OTHERWISE ON THE DRAWINGS, OUTLET BOXES SHALL BE SO LOCATED AS TO ALLOW THE ASSOCIATED DEVICE OR FIXTURE TO BE MOUNTED AT LOCATIONS AS INDICATED ON THE DRAWINGS.
E. PROVIDE PULL BOXES AND JUNCTION BOXES AS INDICATED ON THE PLANS, OR AS REQUIRED. BOXES SHALL BE SIZED AS INDICATED ON THE PLANS AND WHERE NOT INDICATED, THEY SHALL BE SIZED IN ACCORDANCE WITH ARTICLE 370 OF THE NATIONAL ELECTRICAL CODE.
F. PROVIDE COVERPLATES FOR ALL OUTLET BOXES EXCEPT COMMUNICATIONS OUTLETS.
G. IN ALL CASES, WHERE TWO OR MORE DEVICES ARE INSTALLED IN GANG BOXES, GANG PLATES WITH SUITABLE OPENINGS SHALL BE PROVIDED.

WIRING DEVICES
A. SUBJECT TO COMPLIANCE WITH REQUIREMENTS, PROVIDE THE FOLLOWING PRODUCTS, OR AN APPROVED EQUAL.
B. TOGGLE SWITCHES: 20 AMPERE, 120-277 VOLT, AC ONLY, QUIET TYPE, HUBBELL #1221 (SP), #1222 (DP), #1223 (3-WAY), #1224 (4-WAY).
C. GROUND FAULT CIRCUIT INTERRUPTING RECEPTACLES: NEMA 5-15R, 15 AMPERE, 125 VOLT, 2-POLE, 3-WIRE DUPLEX, HUBBELL #GF5252, OR APPROVED EQUAL.
D. PROVIDE COVERPLATES FOR ALL WIRING DEVICES.
E. MULTIPLE OUTLETS SHALL BE PROVIDED WITH MULTIPLE GANG PLATES OF ONE-PIECE CONSTRUCTION.
F. COVERPLATES FOR OUTDOOR GFI DUPLEX RECEPTACLES SHALL BE TAYMAC # 20310, OR APPROVED EQUAL FOR USE WITH TYPE "FS" BOXES. COVERPLATES SHALL HAVE NEMA 3R RATING.
G. COVERPLATES FOR ALL FLUSH MOUNTED DEVICES SHALL BE HIGH-IMPACT SMOOTH NYLON, WITH COLOR TO MATCH DEVICE.

CIRCUIT AND MOTOR DISCONNECTS
A. ALL DISCONNECT SWITCHES SHALL BE HEAVY DUTY TYPE NEMA 1 FOR INDOOR AND NEMA 3R FOR OUTDOOR
B. ALL DISCONNECTS SWITCHES SHALL BE UL LISTED 240 VOLT OR 600 VOLT RATING AS REQUIRED.
C. FURNISH AND INSTALL DISCONNECT SWITCHES WHERE INDICATED ON THE DRAWINGS AND/OR WHERE REQUIRED BY CODE. DISCONNECT SWITCHES SHALL BE FUSIBLE OR NON-FUSIBLE, AS INDICATED, OR REQUIRED, TO PROVIDE THE REQUIRED DISCONNECT MEANS AND/OR BRANCH CIRCUIT PROTECTION.
D. DISCONNECT SWITCHES SHALL BE AS MANUFACTURED BY SQUARE D COMPANY, G. E. COMPANY, SIEMENS, OR APPROVED EQUAL.

SUPPORTING DEVICES
A. PROVIDE SUPPORT FOR ALL ELECTRICAL WORK AS INDICATED ON THE DRAWINGS, AS SPECIFIED HEREIN, OR AS REQUIRED BY CODE.
B. COMPLY WITH NEC AS APPLICABLE TO CONSTRUCTION AND INSTALLATION OF ELECTRICAL SUPPORTING DEVICES.
C. COMPLY WITH APPLICABLE REQUIREMENTS OF ANSI/NEMA STD. PUB. NO. FB 1, "FITTINGS AND SUPPORTS FOR CONDUIT AND CABLE ASSEMBLIES".
D. COMPLY WITH THE NATIONAL ELECTRICAL CONTRACTORS ASSOCIATION "STANDARD OF INSTALLATION" PERTAINING TO ANCHORS, FASTENERS, HANGERS, SUPPORTS AND EQUIPMENT MOUNTING.
E. WHERE MANUFACTURED SUPPORTING DEVICES ARE PROVIDED, THEY SHALL COMPLY WITH MANUFACTURER'S STANDARD MATERIALS, DESIGN, AND CONSTRUCTION IN ACCORDANCE WITH PUBLISHED PRODUCT INFORMATION.
F. FURNISH AND INSTALL ALL NECESSARY HANGERS, SUPPORTS, ETC., AS REQUIRED, FOR RIGIDLY AND SECURELY MOUNTING ALL SWITCHES, CONNECTOR BOXES, LIGHTING FIXTURES, PANELBOARDS, PULL BOXES, CONDUIT, OUTLET BOXES, AND ALL OTHER ITEMS OF ELECTRICAL WORK INCLUDED IN THIS PROJECT.
G. ALL HANGERS AND SUPPORTS SHALL BE FASTENED TO THE BUILDING STRUCTURE BY MEANS OF BOLTS, U-CHANNEL STRUT SYSTEM, ANCHORS AND RODS, OR OTHER APPROVED MEANS.
H. TYPE MC CABLES SHALL BE SUPPORTED WITHIN 12 INCHES OF EVERY JUNCTION OR OUTLET BOX, AND AT INTERVALS NOT TO EXCEED 6'-0" IN ACCORDANCE WITH THE NEC.
I. LIGHTING FIXTURES SHALL BE SECURELY SUPPORTED FROM THE BUILDING STRUCTURE, AS INDICATED ON THE DRAWINGS OR AS SPECIFIED HEREIN.

ELECTRICAL IDENTIFICATION
A. FURNISH AND INSTALL A CONDUCTOR IDENTIFICATION BAND ON EACH CONDUCTOR IN EACH BOX/ENCLOSURE/CABINET WHERE WIRES OF MORE THAN ONE CIRCUIT ARE PRESENT, EXCEPT WHERE ANOTHER FORM OF IDENTIFICATION, SUCH AS COLOR CODED CONDUCTORS, IS PROVIDED. CONDUCTOR IDENTIFICATION BANDS SHALL BE T & B TYPE E-Z, OR APPROVED EQUAL.
B. FURNISH AND INSTALL AN ENGRAVED PLASTIC LAMINATE IDENTIFICATION PLATE AT EACH PANELBOARD AND DISCONNECT SWITCH. SECURE WITH STAINLESS STEEL SCREWS. INCLUDE THE FOLLOWING INFORMATION:
C. DISTRIBUTION LIGHTING AND APPLIANCE PANELBOARDS - PANEL NAME IN 1/4" LETTERS, VOLTAGE AND PHASE IN 1/8" LETTERS (E.G., "PANEL A, 120/240V, 1-PHASE, 4 WIRE").
D. EACH DISCONNECT SWITCH - LOAD SERVED, VOLTAGE AND CIRCUIT NUMBER IN 1/8" LETTERS (E.G., "ACU-1, 240V, A-6")

GROUNDING
A. FURNISH AND INSTALL SYSTEM, ENCLOSURE, AND EQUIPMENT GROUNDING FOR ALL ELECTRIC WIRING FOR THE BUILDING IN FULL COMPLIANCE WITH THE REQUIREMENTS OF LOCAL CODES AND THE NEC. ALL GROUNDING CONDUCTORS SHALL BE COPPER.
B. PROVIDE GROUNDING PRODUCTS THAT ARE UL LISTED AND LABELED AND COMPLY WITH ESTABLISHED INDUSTRY STANDARDS FOR APPLICATIONS INDICATED.
C. A CONTINUOUS (GREEN) EQUIPMENT GROUNDING CONDUCTOR SHALL BE PROVIDED WITH ALL FEEDERS AND BRANCH CIRCUITS. THIS GROUNDING CONDUCTOR SHALL BE INSULAT

LEGEND

SYMBOL	DESCRIPTION	MOUNTING HEIGHT TO CENTER LINE	BACK BOX AND PLASTER RING SIZE	CONDUIT SIZE
STRUCTURED CABLING / PAGING				
x	DATA OUTLET (SUB-SCRIPT DENOTES NUMBER OF OUTLETS IN FACEPLATE)	18" AFF OR MATCH POWER OUTLET	4" x 4" x 2 1/2" WITH SINGLE GANG MUD RING	1"
x	WIRELESS ACCESS POINT CONNECTION (SUB-SCRIPT REPRESENTS NUMBER OF OUTLETS IN FACEPLATE)	FINISH CEILING OR ABOVE CEILING	4" x 4" x 2 1/2" WITH SINGLE GANG MUD RING	1"
w	WALL PHONE VOICE OUTLET	+46" AFF OR PER ARCH. ELEVATIONS	4" x 4" x 2 1/2" WITH SINGLE GANG MUD RING	1"
	TELECOMMUNICATIONS GROUNDING BAR (ELEVATION VIEW) PROVIDED BY DIVISION 26.	WALL MOUNTED OR AS VENDOR SPECIFIED	N/A	N/A

ABBREVIATIONS

ABC	ABOVE COUNTER
AC	ABOVE CEILING
AFF	ABOVE FINISHED FLOOR
ATC	ACOUSTIC TILE CEILING
C	CONDUIT
CFCI	CONTRACTOR FURNISHED CONTRACTOR INSTALLED
DAS	DISTRIBUTED ANTENNA SYSTEM
EF	ENTRANCE FACILITY
ER	EQUIPMENT ROOM
ERRCS	EMERGENCY RESPONDER RADIO COMMUNCATION SYSTEM
JB	JUNCTION BOX
MM	MULTI MODE
NTS	NOT TO SCALE
OFCI	OWNER FURNISHED CONTRACTOR INSTALLED
OFOI	OWNER FURNISHED OWNER INSTALLED
PACS	PICTURE ARCHIVE AND COMMUNICATION SYSTEM
POE	POWER OVER ETHERNET
RIO	ROUGH IN ONLY
RTL	REFER TO HOST DEVICE LEGEND
RTLS	REAL TIME LOCATION SYSTEM
RU	RACK UNIT
SM	SINGLE MODE
SMH	SPECIAL MOUNTING HEIGHT
TGB	TELECOM GROUNDING BUSBAR
TMGB	TELECOM MAIN GROUNDING BUSBAR
TR	TELECOM ROOM
TYP	TYPICAL
WAP	WIRELESS ACCESS POINT
WP	WEATHER PROOF (EXTERIOR APPLICATION)
+72"	NUMBER DENOTES MOUNTING HEIGHT ABOVE FINISHED FLOOR TO CENTER LINE
(X)Y"	"X" DENOTES NUMBER OF CONDUITS, "Y" DENOTES TRADE SIZE OF CONDUIT

PATHWAY

J	COMMUNICATIONS JUNCTION BOX	ABOVE CEILING (AC), OR AS NOTED	4" x 4" x 2 1/2" WITH SINGLE GANG MUD RING (FOR HARD CEILING ONLY)	1" IF HARD CEILING
J	COMMUNICATIONS JUNCTION BOX - WALL MOUNTED	18" OR AS NOTED	4" x 4" x 2 1/2" WITH SINGLE GANG MUD RING	1"
J	COMMUNICATIONS JUNCTION BOX - FLOOR MOUNTED	FLUSH IN FLOOR	POKE THRU OR CAST IN PLACE BY DIVISION 26	1"
X"	X" CONDUIT SLEEVE	N/A	N/A	N/A
X"	SLEEVE/CONDUIT	N/A	N/A	N/A
	CABLE TRAY	AS NOTED OR SEE SPECIFICATIONS	N/A	N/A
	LADDER RACK	AS NOTED OR SEE SPECIFICATIONS	N/A	N/A
	CONDUIT UP	N/A	N/A	N/A
	CONDUIT DOWN	N/A	N/A	N/A
	CONDUIT IN WALL OR CEILING	N/A	N/A	N/A
	CONDUIT IN SLAB OR BELOW GRADE	N/A	N/A	N/A
	J-HOOKS	N/A	N/A	N/A

SHEET INDEX

NUMBER	SHEET NAME
T0.1	TECHNOLOGY GEN NOTES & LEGENDS
T1.1	TECH. FIRST FLR./MEZZ. BUILD-OUT
T5.0	TECHNOLOGY DETAILS

GENERAL CONSTRUCTION NOTES

A. COORDINATE LOCATION AND MOUNTING REQUIREMENTS OF ALL CEILING MOUNTED OR ABOVE CEILING MOUNTED DEVICES WITH REFLECTED CEILING PLAN, LIGHTING LAYOUT, AND OTHER CEILING OR ABOVE CEILING MOUNTED EQUIPMENT.

B. ALL ABOVE CEILING WORK IN EXISTING FACILITY IS TO BE CONDUCTED IN ACCORDANCE WITH FACILITY I.C.R.A. POLICIES.

C. DEVICES MOUNTED IN/ADJACENT TO CASEWORK - PRIOR TO ROUGH-IN, COORDINATE EXACT DEVICE LOCATIONS WITH ARCHITECTURAL CASEWORK ELEVATIONS. COORDINATE WITH CASEWORK SHOP DRAWINGS FOR CABLING PATHWAY AND ROUGH-IN REQUIREMENTS.

D. DRAWINGS ARE SCHEMATIC IN NATURE AND ARE NOT DRAWN TO SCALE. CONTRACTOR IS RESPONSIBLE FOR COORDINATING EXACT ROUTING OF ALL SERVICES AND DISTANCES WITH EXISTING CONDITIONS AND WITH ALL OTHER TRADES.

E. CONDUITS ARE TO HAVE A MAXIMUM 40% FILL RATIO.

F. IN THE INSTALLATION OF THIS WORK, THE CONTRACTOR IS TO COMPLY WITH THE REQUIREMENTS OF LOCAL LAWS AND ORDINANCES, APPLICABLE STATE LAWS, THE NATIONAL BOARD OF FIRE UNDERWRITERS, AND THE NATIONAL ELECTRIC CODE.

G. CAREFULLY EXAMINE THE PREMISES TO DETERMINE THE EXTENT OF WORK AND THE CONDITION UNDER WHICH IT MUST BE DONE. IF THERE ARE ANY QUESTIONS REGARDING THE PROJECT, THE CONTRACTOR IS RESPONSIBLE FOR OBTAINING CLARIFICATIONS FROM THE ENGINEER OR DESIGNATED REPRESENTATIVE BEFORE PROCEEDING WITH WORK OR RELATED WORK IN QUESTION.

H. ANY DISCREPANCIES BETWEEN THE PLANS AND ACTUAL FIELD CONDITIONS MUST BE BROUGHT TO THE IMMEDIATE ATTENTION OF THE ENGINEER OR DESIGNATED REPRESENTATIVE FOR CLARIFICATION.

I. ALL WORK IS TO BE DONE IN A THOROUGH AND PROFESSIONAL MANNER ACCORDING TO INDUSTRY AND MANUFACTURERS' STANDARDS AND WILL BE SUBJECT TO INSPECTION AND ACCEPTANCE. WORK THAT IS DEEMED SUB-STANDARD WILL BE SUBJECT TO REPLACEMENT OR REPAIR AT NO ADDITIONAL COST TO THE OWNER OR GENERAL CONTRACTOR.

J. THE CONTRACTOR IS REQUIRED TO PROPERLY FIRE-STOP ANY WALL OR FLOOR PENETRATIONS UTILIZED FOR THE PLACEMENT OF COMMUNICATIONS CABLING WITH APPROVED FIRE-STOPPING COMPOUND AND ACCORDING TO LOCAL AND NATIONAL CODES.

K. ALL PENETRATED STRUCTURES ARE TO BE RETURNED TO ORIGINAL CONDITION AND FIRE RATING.

L. WIRELESS ACCESS POINT LOCATIONS ARE DIAGRAMMATIC ONLY FOR BUDGETARY PURPOSES. FINAL LOCATION TO BE DETERMINED BY OWNER.

M. A PULL BOX SHALL BE PLACED IN A CONDUIT RUN WHEN ANY OF THE FOLLOWING CONDITIONS EXIST:
1. THE LENGTH OF THE CONDUIT RUN IS OVER 100 FEET.
2. THERE ARE MORE THAN TWO 90 DEGREE BENDS IN THE CONDUIT RUN.
3. THERE IS A REVERSE BEND IN THE CONDUIT RUN.

N. PULL BOXES AND JUNCTION BOXES SHALL BE PLACED IN EASILY ACCESSIBLE LOCATIONS. PULL BOX SIZES SHALL BE AS DEFINED BY THE NATIONAL ELECTRICAL CODE.

O. PULL BOXES SHALL BE PLACED IN STRAIGHT SECTION OF CONDUIT AND NOT USED TO REPLACE A BEND. CONDUITS ENTERING AND EXITING PULL BOXES SHALL BE ALIGNED WITH ONE ANOTHER TO ALLOW FOR EASE OF CABLE INSTALLATION.

FACE PLATE REQUIREMENTS

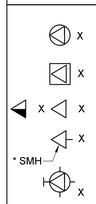

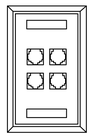

INITIAL CAPACITY: X CONNECTIONS
MAXIMUM CAPACITY: 4 CONNECTIONS

QTY	DESCRIPTION
1-4	HORIZONTAL COMMUNICATION CABLE(S)**
1	4 PORT FACEPLATE

1 UL LISTED HORIZONTAL COMMUNICATION CABLE PULLED TO EACH DATA JACK. INSTALL BLANKS IN UNUSED JACKS.

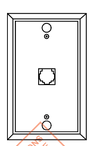

MAXIMUM CAPACITY: 1 CONNECTION

QTY	DESCRIPTION
1	HORIZONTAL COMMUNICATION CABLE(S)**
1	1 PORT FACE PLATE

1 UL LISTED HORIZONTAL COMMUNICATION CABLE PULLED TO EACH DATA JACK.

* COORDINATE ALL VOICE/DATA LOCATIONS, SPECIAL MOUNTING HEIGHT (SMH) DEVICES WITH ARCHITECTURAL WALL ELEVATIONS AND/OR MOUNTING HEIGHTS OF POWER DEVICES ON ELECTRICAL DRAWINGS.

** REFER TO SPECIFICATIONS FOR JACK AND CABLING REQUIREMENTS.

ADHERE TO SPECIFICATIONS. ADDITIONAL COST ON THE OWNER'S EQUIPMENT IS NOT INCLUDED. COMPLETE INSTALLATION IS REQUIRED BY OWNER'S REPRESENTATIVE.
No alterations, additions, or modifications of this document are allowed without written permission of this office.
TENNESSEE STATE FIRE MARSHAL'S OFFICE

PROJECT NO.	39999-3609-04
PIN NO.	131121.0

REVISIONS

DESCRIPTION	BY	DATE

TDOT HENDERSON COUNTY MAINTENANCE BUILDING
370 ROCK MILAM ROAD
CEDAR GROVER, TN 38321

PHASE: CONSTRUCTION
DATE: AUGUST 18, 2023

Wold HFR DESIGN
214 Centerview Drive Suite 300
Brentwood, TN 37027
woldae.com phone: 615.370.8500
fax: 615.370.8530

SSR Smith Seckman Reid, Inc.
2650 Thousand Oaks Boulevard, Suite 4200
Memphis, TN 38118
(901) 683-3900
FAX: (901) 683-3990
www.ssr-inc.com
SSR Project #: 22640590

SEALED BY

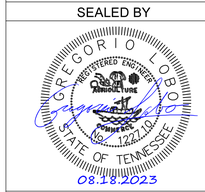

STATE OF TENNESSEE
DEPARTMENT OF
TRANSPORTATION

TECHNOLOGY GEN NOTES & LEGENDS
T0.1

SHEET 31 OF 34

FIELD SET TFM# 21349 PROJECT# 2024-04-17-10

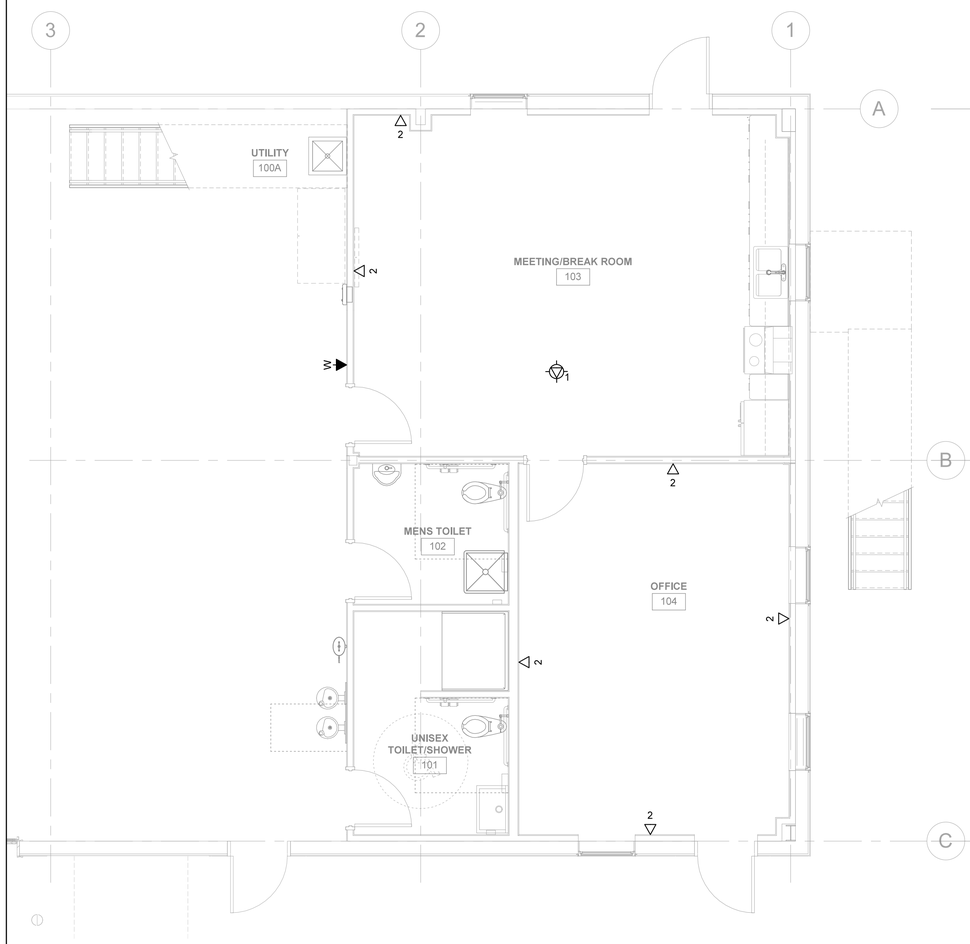

1 TECHNOLOGY FIRST FLOOR - BUILD-OUT

0 2' 4' 6'

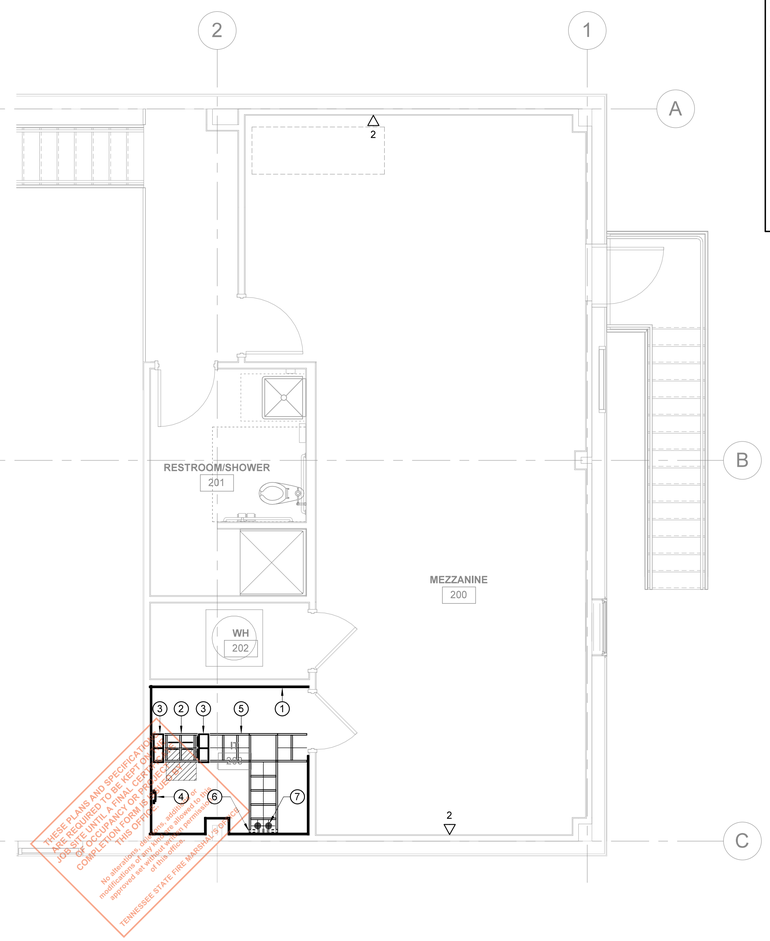

2 TECHNOLOGY MEZZANINE PLAN

0 2' 4' 6'

GENERAL NOTES

A. TELECOMMUNICATIONS ROOM EQUIPMENT RACKS, LADDER RACK AND ALL CABLING WILL BE INSTALLED BY THE STATE IT CABLING CONTRACTOR NOT THE GENERAL CONTRACTOR FOR THE PROJECT.

B. TELECOMMUNICATIONS ROOM LAYOUTS ARE SHOWN AS CONCEPTUAL IN NATURE. VIEW IS INTENDED TO INDICATE DESIRED ROOM LAYOUT AND EQUIPMENT LOCATIONS.

C. CABLE TRAY DEPTH REFERS TO TRAY'S LOADING DEPTH.

D. PROPERLY FIRE SEAL CONDUIT AND RACEWAY PENETRATIONS THROUGH FIRE-RATED WALLS AND FLOORS TO MAINTAIN THE FIRE SEPERATION RATING. PROVIDE FIRE STOPPING SYSTEMS THAT ARE UL LISTED FOR THE APPLICATION. COORDINATE REQUIREMENTS WITH LOCAL FIRE MARSHAL PRIOR TO INSPECTION. DO NOT MIX PRODUCTS BETWEEN MANUFACTURED ASSEMBLIES.

E. PROVIDE PLASTIC BUSHINGS ON EXPOSED ENDS OF CONDUITS AND SLEEVES, WHETHER VISIBLE OR NOT.

F. COORDINATE HORIZONTAL PATHWAYS WITH GENERAL CONTRACTOR AND LOW VOLTAGE INSTALLER.

G. ALL TELECOMMUNICATIONS OUTLETS SHOULD BE 1" CONDUIOT DIRECTLY BACK TO IT ROOM. NO JUNCTION BOXES, MINIMAL 90 DEGREE BEND. PROVIDE PULL STRING IN ALL CONDUITS.

SHEET KEYED NOTES

1. PROVIDE 3/4" FIRE-RATED PLYWOOD BACKBOARD ON ALL WALLS OF ROOM AS SHOWN. STARTING AT 6" AFF TO 8'-6" AFF. MASK FIRE RATING STAMP PRIOR TO PAINTING PLYWOOD WHITE WITH FIRE-RATED PAINT. USE FLUSH FASTENERS FOR MOUNTING PLYWOOD.
2. 2-POST 19" W x 7' H EQUIPMENT RACK.
3. 6" W VERTICAL WIRE MANAGER.
4. GROUNDING BUSBAR MOUNTED AT 7'-0".
5. 15" x 4" WIDE CABLE LADDER RACK MOUNTED AT 7'-0" AFF.
6. 15" x 2" WIDE CABLE LADDER RACK MOUNTED VERTICALLY ON WALL.
7. (2) 4" CONDUITS FOR SERVICE PROVIDER TO PROPERTY ROW WILL NEED TO TERMINATE IN A 36" x 36" x 30" TELECOMMUNICATIONS PULL BOX WITH TRAFFIC RATED LID IN THE PROPERTY ROW EVERY 300', THEN EXTENDED FROM PULL BOX TO THE SERVICE PROVIDER POLE OR SERVICE POINT WITHIN THE ROW. GENERAL CONTRACTOR WILL NEED TO COORDINATE WITH STATE STS IT ON THE LOCATIONS OF THE SERVICE CONDUITS. (NOTE: IF THIS FACILITY IS ON A SITE WITH AN EXISTING COUNTY MAINTENANCE GARGE, INCOMING SERVICE PROVIDER CONDUITS SHOULD BE INSTALLED TO THE NEAREST EXISTING TELECOMMUNICATIONS PULL BOX. COORDINATE PATHWAY WITH ANGIE BEASON.) PROVIDE PULL ROPE IN EACH SERVICE PROVIDER CONDUIT.

PROJECT NO.	39999-3609-04
PIN NO.	131121.0

REVISIONS

DESCRIPTION	BY	DATE

TDOT HENDERSON COUNTY MAINTENANCE BUILDING

370 ROCK MILAM ROAD
CEDAR GROVER, TN 38321

PHASE: CONSTRUCTION

DATE: AUGUST 18, 2023

Wold HFR DESIGN
214 Centerview Drive Suite 300
Brentwood, TN 37027
woldae.com phone: 615.370.8500
fax: 615.370.8530

SSR Smith Seckman Reid, Inc.
2650 Thousand Oaks Boulevard,
Suite 4200
Memphis, TN 38118
(901) 683-3900
FAX: (901) 683-3990
www.ssr-inc.com
SSR Project #: 22640590

SEALED BY

GREGORIO LOBO
REGISTERED ENGINEER
STATE OF TENNESSEE
No. 122719
08.18.2023

STATE OF TENNESSEE
DEPARTMENT OF
TRANSPORTATION

TECH. FIRST FLR./MEZZ. BUILD-OUT
T1.1

SHEET 32 OF 34

FIELD SET TFM# 21349 PROJECT# 2024-04-17-10

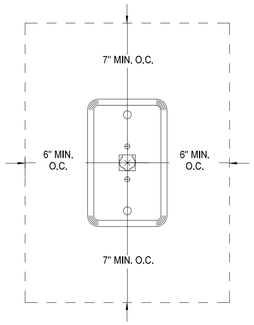

GENERAL NOTE:
G1. ANY DEVICE MOUNTED ADJACENT TO, ABOVE, OR BELOW WALL PHONE OUTLET, IS NOT TO INFRINGE WITHIN THE BORDERS OF THE DASHED LINES NOTED ABOVE. COORDINATE WITH ARCHITECTURAL ELEVATIONS AND OTHER WALL MOUNTED DEVICES.

WALL PHONE CLEARANCE REQUIREMENTS — 3

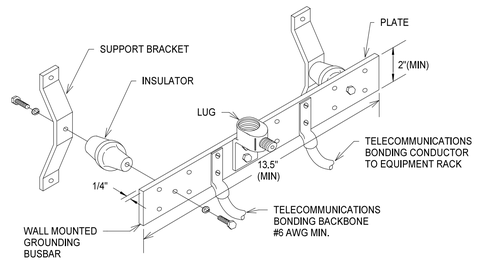

GENERAL NOTE:
G1. MINIMUM 2" STAND-OFF FROM WALL TO BACK SIDE OF PLATE

TELECOMMUNICATION GROUNDING BUS BAR (TGB) — 4

NOTE:

THIS INFORMATION MAY NOT CONTAIN ALL DETAILS REQUIRED FOR CONSTRUCTION. APPROPRIATE MODIFICATION MAY BE REQUIRED TO ENSURE SUITABILITY OF THESE DRAWINGS FOR THE SPECIFIC APPLICATION. IT IS THE USER'S RESPONSIBILITY TO ENSURE INSTALLATION OF THE EQUIPMENT/SYSTEM IS IN ACCORDANCE WITH BUILDING/PROJECT SPECIFICATIONS, APPLICABLE CODES AND STANDARDS.

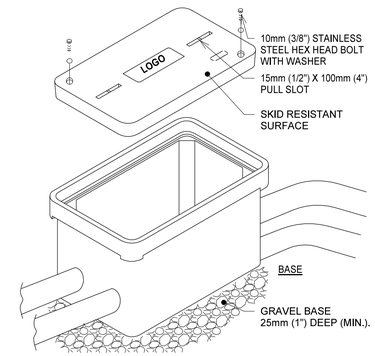

NOTES:

1. PROVIDE STANDARD HANDHOLE OF DIMENSIONS CALLED OUT IN DRAWINGS AND SPECIFICATIONS.
2. COVER, RING AND BOX SHALL BE MADE OF SAME MATERIAL.
3. ALL CONDUITS MUST ENTER HAND HOLE HORIZONTALLY.

TYPICAL HANDHOLE DETAIL — 5

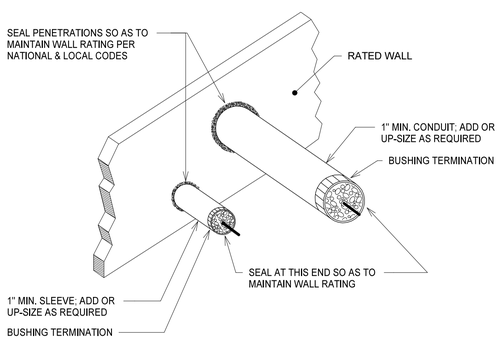

RATED WALL CONDUIT AND SLEEVE PENETRATIONS — 1

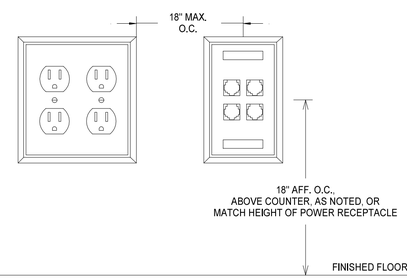

GENERAL NOTE:
G1. VOICE/DATA OUTLETS TO BE MOUNTED ADJACENT TO POWER OUTLETS WHERE APPLICABLE, COORDINATE ALL MOUNTING HEIGHTS WITH ARCHITECTURAL WALL ELEVATIONS, ELECTRICAL DRAWINGS, AND EQUIPMENT VENDOR DRAWINGS.

POWER OUTLET COORDINATION REQUIREMENTS — 2

THESE PLANS AND SPECIFICATIONS ARE REQUIRED TO BE KEPT ON THE JOB SITE UNTIL A FINAL CERTIFICATE OF OCCUPANCY OR THE COMPLETION FORMS ARE RECEIVED BY THE OFFICE.
Reproduction in any kind or medium, additions or modifications are allowed to this plan without written permission of this office.
TENNESSEE STATE FIRE MARSHAL'S OFFICE

PROJECT NO.	39999-3609-04
PIN NO.	131121.0

REVISIONS

DESCRIPTION	BY	DATE

TDOT HENDERSON COUNTY MAINTENANCE BUILDING

370 ROCK MILAM ROAD
CEDAR GROVER, TN 38321

PHASE: CONSTRUCTION
DATE: AUGUST 18, 2023

Wold HFR DESIGN
214 Centerview Drive Suite 300
Brentwood, TN 37027
woldae.com phone: 615.370.8500
fax: 615.370.8530

SSR Smith Seckman Reid, Inc.
2650 Thousand Oaks Boulevard, Suite 4200
Memphis, TN 38118
(901) 683-3900
FAX: (901) 683-3990
www.ssr-inc.com
SSR Project #: 22640590

SEALED BY

GREGORIO LOBO
REGISTERED ENGINEER
No. 122710
STATE OF TENNESSEE
08.18.2023

STATE OF TENNESSEE
DEPARTMENT OF TRANSPORTATION

TECHNOLOGY DETAILS

T5.0

SHEET 33 OF 34

FIELD SET TFM# 21349 PROJECT# 2024-04-17-10

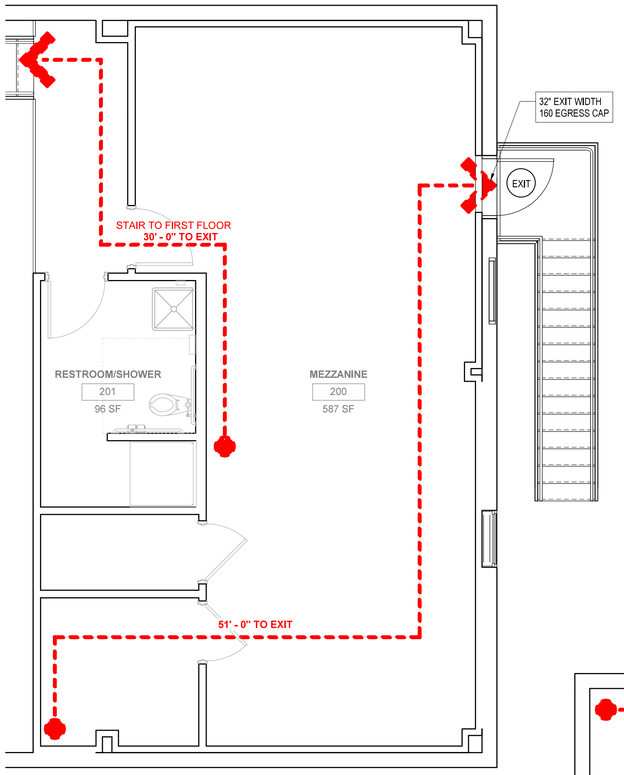

1 MEZZANINE LIFE SAFETY PLAN

0 2' 4' 6'

OCCUPANT LOAD:

MEZZANINE STORAGE	300 GSF / OCCUPANT	917 GSF	3
OFFICE AREAS	100 GSF / OCCUPANT	917 GSF	10
PARKING GARAGES	200 GSF / OCCUPANT	2,125 GSF	11
			24 TOTAL
(MOST RESTRICTIVE) BUSINESS	100 GSF / OCCUPANT	3,959 GSF	**40 TOTAL**

MEZZANINE
917 GSF
300/OCC. -
300/917 = 3 OCCUPANTS
NOT TO EXCEED 10 OCCUPANTS

PARKING GARAGE
2,125 GSF
200/OCCUPANT -
200/2,125 = 11 OCCUPANTS

OFFICE
917 GSF
100/OCC. -
100/917 = 10 OCCUPANTS

LIFE SAFETY LEGEND

15'-0" C=180

1 POINT OF DECISION
2 TRAVEL DISTANCE
3 POINT OF EGRESS
4 LINE OF TRAVEL
5 EGRESS CAPACITY (EXIT WIDTH/.2)

EXIT EXIT LOCATION
FEC FIRE EXTINGUISHER CABINET
FE FIRE EXTINGUISHER
F FIRE ALARM PULL
F FIRE ALARM VISUAL ALARM
F FIRE ALARM AUDIO/VISUAL ALARM

ROOM TAG
ROOM NAME
ROOM #
AREA
OCCUPANT LOAD

FAA FIRE ALARM ANNUNCIATOR PANEL
FACP FIRE ALARM CONTROL PANEL
D SMOKE DETECTOR
EXIT SIGN (SINGLE SIDED)
EXIT SIGN WITH DIRECTIONAL ARROW

GENERAL LIFE SAFETY NOTES

GENERAL

1. DETAILS AND NOTES ABOUT RATED WALLS AND RATED PENETRATIONS ARE PROVIDED IN CASE CONTRACTOR COMES ACROSS A SITUATION WHERE THEY ARE NEEDED. SOME OF THE RATED WALL AND PENETRATION NOTES MAY NOT APPLY TO THIS PROJECT. CONTACT THE ARCHITECT IF QUESTIONS ARISE.
2. THE CONTRACTOR SHALL AT ALL TIMES ENDEAVOR TO CONSTRUCT THE FACILITY IN STRICTEST ACCORDANCE TO SOUND PRACTICES OF FIRE RESISTIVE CONSTRUCTION. DEVIATIONS FROM MFG RECOMMENDATIONS, INDEPENDENT FIRE TESTS, OR UL ASSEMBLY REQUIREMENTS SHALL BE...

ALL WORK

1. FIRE AND SMOKE PARTITION / BARRIER IDENTIFICATION: NONE REQUIRED IN PROJECT
2. ALL G.W.B. SHALL BE 5/8" TYPE 'X' U.N.O. STAGGER JOINTS ON OPPOSITE SIDES OF PARTITIONS AS...
   - VERTICAL JOINTS OFFSET 16" HORIZONTALLY
   - HORIZONTAL JOINTS OFFSET 24" VERTICALLY. HORIZONTAL JOINTS SHALL NOT OCCUR BELO...

   USE TYPE S OR S12 FASTENERS INSTALLED IN ACCORDANCE WITH APPLICABLE FIRE TEST, BUT NO LESS THAN AS FOLLOWS:
   - ALL EDGES OF BOARD SHALL BE SCREWED NOT MORE THAN 8" O.C. TO SOLID FRAMING.
   - SCREWS WITHIN THE FIELD OF THE BOARD SHALL NOT EXCEED 12" O.C. FASTENED TO SOLID...

   AT DOUBLE LAYER G.W.B APPLICATIONS, SECURE SECOND LAYER TO FIRST WITH FASTENERS (DO NOT USE ADHESIVES). PLACE SECOND LAYER PERPENDICULAR TO FIRST LAYER. OFFSET JOINTS OF SECOND LAYER FROM JOINTS OF FIRST LAYER. FINISH JOINTS FULL HEIGHT OF WALL WITH TAPE & COMPOUND PER SPECIFICATIONS
3. FIRESTOP ALL INTERUPTIONS TO FIRE RATED ASSEMBLIES, MATERIALS, AND COMPONENTS WITH MATERIALS WHICH HAVE BEEN TESTED ACCORDING TO ASTM E814, UL 1479, OR UL 2079 TO PROVIDE A FIRE RATING AND SMOKE RATING EQUAL TO THAT OF CONSTRUCTION BEING PENETRATED.

NOTE: THIS DRAWING MUST BE PRINTED IN COLOR TO REPRODUCE ALL FIRE RATED WALL SYMBOLS.

GENERAL LIFE SAFETY NOTES...

4. INSTALL BLOW-OUT PATCHES MADE OF LAYERS OF G.W.B. EQUAL TO THAT OF THE PARTITION CONSTRUCTION. CUT TO FIT TIGHT TO PENETRATIONS, IN INSTANCES WHERE THE ANNULAR OPENING EXCEED THAT ALLOWED BY THE UL ASSEMBLY. DO NOT APPLY JOINT COMPOUND OVER SCREWS AT PATCHES. DO NOT REMOVE EXCESS COMPOUND FROM EDGES OF PATCH AFTER PLACEMENT.
   - WHERE THE DIAMETER OF THE OPENING IS LESS THAN 3", THE BLOW-OUT PATCH SHALL EXTEND A MINIMUM OF 6" BEYOND THE OPENING IN ALL DIRECTIONS. THE PATCH SHALL BE FASTENED NOT LESS THAN 3" FROM THE EDGE OF THE PATCH WITH JOINT COMPOUND APPLIED TO THE BACKSIDE OF THE PATCH.
   - WHERE THE DIAMETER OF THE OPENING IS GREATER THAN 3", THE BLOW-OUT PATCH SHALL EXTEND A MINIMUM OF 6" ABOVE AND BELOW THE OPENING AND A MINIMUM OF 3" BEYOND THE STUDS ON BOTH SIDES OF THE OPENING. RUNNER CHANNELS SHALL BE SECURED TO THE STUDS ABOVE AND BELOW THE OPENING. THE PATCHES SHALL BE FASTENED TO THE STUDS & CHANNELS A MINIMUM OF 3" FROM THE EDGES OF THE PATCH WITH JOINT COMPOUND APPLIED TO THE BACKSIDE OF THE PATCH.
5. INSTALL G.W.B. TIGHT TO ALL DUCTS AND DUCT INSULATION. USE METALLIC DUCT TAPE TO SEAL BETWEEN THE DUCT AND THE G.W.B.
6. INSTALL METALLIC SLEEVES AROUND LOW VOLTAGE CABLES THAT PENETRATE THE WALL, AND SEAL AROUND THE SLEEVE AND INSIDE THE SLEEVE WITH AN APPROVED SEALANT.
7. PROVIDE ENCLOSURE AND ACCESS PANEL AT EACH FIRE PROTECTION INSPECTION TEST VALVE. DO NOT LOCATE VALVES AND PIPES IN EXTERIOR WALLS. PROVIDE PAINTED STEEL ACCESS PANELS IN WALLS & CEILINGS EQUAL IN RATING TO THE CONSTRUCTION BEING INSTALLED IN.
8. WHERE DEVICES ARE INDICATED IN RATED CONSTRUCTION, THE MAXIMUM ALLOWABLE AREA OF INDIVIDUAL U.L. LISTED BACKBOXES PERMITTED IN THE WALL IS 16 SQ. IN. WITH MAXIMUM AGGREGATE AREA OF 100 SQ. IN PER 100 SF OF WALL AREA. BACKBOXES ON OPPOSITE FACES OF RATED WALLS SHALL BE OFFSET A MINIMUM HORIZONTAL DISTANCE OF 24 INCHES. WHEN PENETRATIONS EXCEED THE ALLOWABLE AREAS, DEVICES SHALL BE PROVIDED WITH A FIVE-SIDED G.W.B. ENCLOSURE OR UL LISTED INTUMESCENT FIRE PUTTY.
9. WHERE DEVICES, CABINETS, OR ACCESSORIES GREATER THAN 16 SQ. IN. ARE INDICATED IN RATED CONSTRUCTION, PROVIDE A FIVE-SIDED G.W.B. ENCLOSURE CONSTRUCTED OF LAYERS OF G.W.B. EQUAL IN NUMBER TO THE CONSTRUCTION BEING PENETRATED.
10. WHERE PARTITIONS MUST BE CONNECTED TO STRUCTURE FOR SUPPORT, INSTALL 20 GUAGE GALVANIZED METAL Z-CLIPS SPACED AS REQ'D, BUT NOT MORE THAN 2'-0" O.C. PRIOR TO APPLICATIO...

GENERAL LIFE SAFETY NOTES...

11. WHERE FIRE RATED WALL ASSEMBLIES OCCUR IN PROXIMITY TO STEEL BEAMS OR JOINTS WITH INADEQUATE DIMENSION TO INSTALL SCREWS, PROVIDE STUD FRAMING AROUND THE BEAM OR JOIST IN ACCORDANCE WITH U.L. DESIGN N-501 WITH LAYERS OF G.W.B. EQUAL IN NUMBER TO THE WALL...
12. DOORS, WINDOWS, AND OTHER OPENINGS SHALL BE RATED EQUAL TO THAT OF THE CONSTRUCTION BEING PENETRATED. PROVIDE POSITIVE LATCHING AT RATED DOOR ASSEMBLIES. GLAZING SHALL BE FIRE RATED EQUAL TO THE WALL CONSTRUCTION AND INSTALLED IN AN EQUALLY RATED FRAMING SYSTEM. TESTED AS AN ASSEMBLY. WIRE GLASS IS NOT PERMITTED.
13. FIRE EXTINGUISHER LOCATIONS: PROVIDE AS SHOWN ON PLANS AND AS INDICATED, WHICHEVER IS MORE RESTRICTIVE. CABINETS SHALL BE FULLY RECESSED (U.N.O.):
   - PROVIDE MULTI-PURPOSE, DRY CHEMICAL, ABC TYPE FIRE EXTINGUISHERS WITH UL RATING OF 4A:60B:C THROUGHOUT THE ENTIRE BUILDING. LOCATE SO THAT A MAXIMUM OF 75 FEET OF TRAVEL FROM ANY SPACE WILL BE PROVIDED.
   - PROVIDE DRY CHEMICAL, ABC TYPE FIRE EXTINGUISHERS WITH UL RATING OF 4A:60B:C IN ALL MECHANICAL SPACES.
   - PROVIDE CLEAN AGENT TYPE FIRE EXTINGUISHERS WITH UL RATING OF 1A:10B:C IN EACH DATA CENTER, MRI ROOM, AND MRI CONTROL ROOM. LOCATE SO THAT A MAXIMUM OF 75 FEET OF TRAVEL FROM ANY SPACE WILL BE PROVIDED.
   - PROVIDE WET-CHEMICAL TYPE, CLASS K WALL-HUNG FIRE EXTINGUISHERS THROUGHOUT KITCHENS. LOCATE SO THAT A MINIMUM OF 10 FEET AND A MAXIMUM OF 20 FEET OF TRAVEL FROM ANY PIECE OF COOKING EQUIPMENT BELOW HOOD WILL BE PROVIDED.
14. REFER TO THE CONTRACT DOCUMENTS FOR ADDITIONAL INFORMATION RELATED TO LIFE SAFETY CONSTRUCTION AND APPROVED UL ASSEMBLIES.

EXIT CAPACITY

PER PLAN REVIEW DATA:
EGRESS WIDTH .2" WIDTH PER OCCUPANT
TOTAL OCCUPANTS 13

13 OCCUPANTS x .2" = 2.6" OF REQUIRED EXIT WIDTH

ACTUAL EXIT CAPACITY:
3 @ 32" = 96"

WALL LEGEND
NOTE: REF. SHEET 11 OF 27 FOR WALL TYPE DETAILS
NON-RATED PARTITION
PRIORITY 1

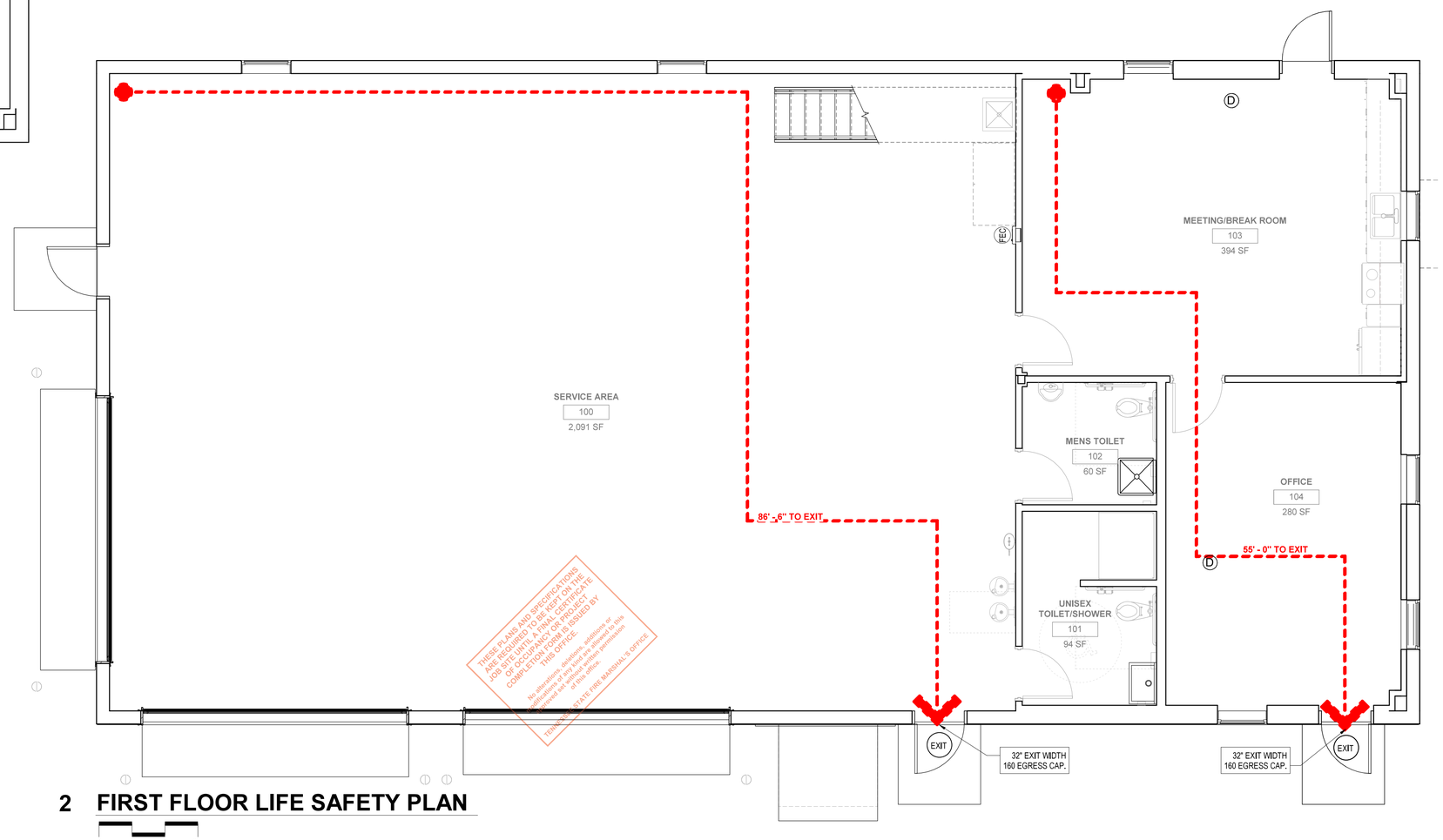

THESE PLANS AND SPECIFICATIONS ARE REQUIRED TO BE KEPT ON THE JOB SITE UNTIL A FINAL CERTIFICATE OF OCCUPANCY OR A PROJECT COMPLETION FORM IS ISSUED BY THIS OFFICE.
No alterations, additions, additions or deductions of any kind are permitted on this plan without the written permission of this office.
TENNESSEE STATE FIRE MARSHALL'S OFFICE

2 FIRST FLOOR LIFE SAFETY PLAN

0 2' 4' 6'

PROJECT NO.	39999-3609-04
PIN NO.	131121.00

REVISIONS

DESCRIPTION	BY	DATE

TDOT HENDERSON COUNTY MAINTENANCE BUILDING
370 ROCK MILAM ROAD,
CEDAR GROVE TN, 38321

PHASE CONSTRUCTION
DATE AUGUST 18,2023

FIELD SET TFM# 21349 PROJECT# 2024-04-17-10

Wold HFR DESIGN
214 Centerview Drive Suite 300
Brentwood, TN 37027
woldae.com phone: 615.370.8500
fax: 615.370.8530

SSR Smith Seckman Reid, Inc.
2650 Thousand Oaks Boulevard,
Suite 3200
Memphis, TN 38118
(901) 683-3900
FAX: (901) 683-3990
www.ssr-inc.com

SEALED BY

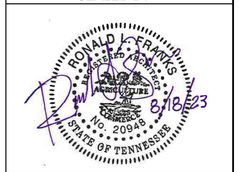

STATE OF TENNESSEE
DEPARTMENT OF
TRANSPORTATION

LIFE SAFETY PLANS

A 09.01

SHEET 34 OF 34